VOL. 15 NOTES FROM THE SHOP NO. 89

Woodsmith®

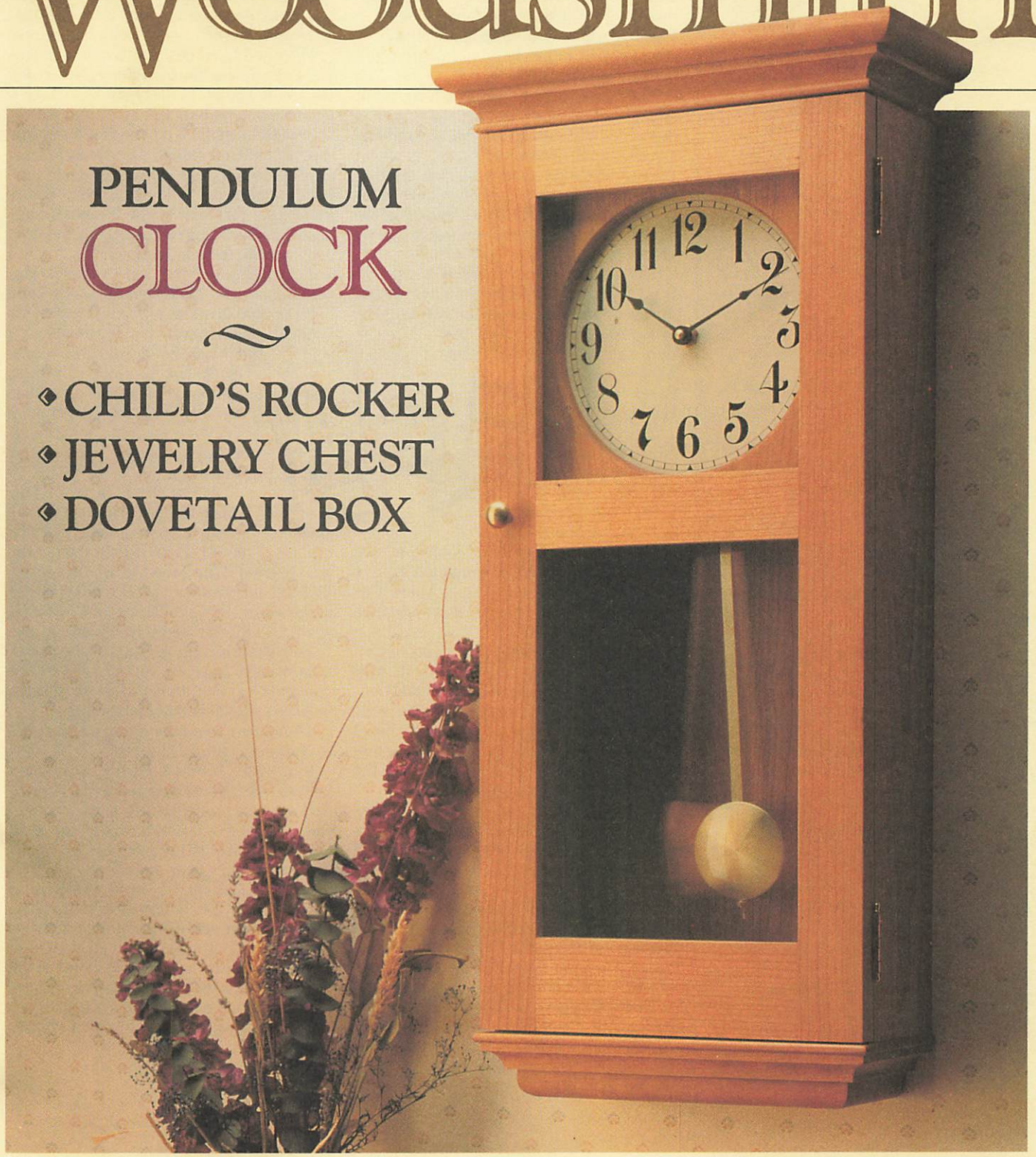

PENDULUM CLOCK

- CHILD'S ROCKER
- JEWELRY CHEST
- DOVETAIL BOX

No. 89 October, 1993

Woodsmith®

Editor Donald B. Peschke
Managing Editor Douglas L. Hicks
Assistant Editors James M. Dolan, Philip A. Totten, Jonathan Garbison

Creative Director Ted Kralicek
Art Director Rod Stoakes
Senior Illustrator David Kreyling
Illustrators Dirk Ver Steeg, Cinda Shambaugh
Photographer Crayola England
Electronic Graphics Chris Glowacki
Design Director Ken Munkel
Senior Designer Jan Hale Svec
Designer Kent Welsh
Shop Manager Steve Curtis
Shop Asst./Facilities Steve Johnson

Circulation Director Liz Bredeson
Subscription Manager Sandy Baum
Circulation Analyst Rod Cain
Newsstand Sales Kent A. Buckton

PUBLISHING SERVICES

Associate Editor: Gordon Gaippe • *Sr. Graphic Artist:* Robert H. Whitmer • *Illustrator:* Mark Higdon

CORPORATE SERVICES

Controller: Paul E. Gray • *Accounting:* Laura Thomas *Bookkeeping:* Julie Greenlee • *Information Services Manager:* Joyce Moore • *Electronic Publishing Coordinator:* Douglas M. Lidster • *Administrative Assistants:* Cheryl A. Scott, Julia Fish • *Receptionist:* Jeanne Johnson • *Building Maintenance:* Ken Griffith, Archie Krause

WOODSMITH MAIL ORDER

Marketing Director: Robert Murry • *Art Director:* Cindy Jackson • *Catalog Products Mgr.:* Bob Baker • *Project Supplies:* Linda Jones • *Technical Support:* Jeff Janes • *Systems Operator:* Linda Morrow

CUSTOMER SERVICE

Manager: Valerie Wiese • *Supervisor:* Jennie Enos *Cust. Service Reps:* Jennifer Murphy, Joy Johnson, Sara Kono, Ami Blanshan, Anna Cox, Chris Lo

SHIPPING DEPARTMENT

Supervisor: Jerry Carson • *Fulfillment:* Gloria Sheehan, Donnie McVey, Chuck Carlson, Sylvia Carey

WOODSMITH STORE

Manager: Dave Larson • *Sales Staff:* Wendell Stone, Dominic Bazzocco • *Office Manager:* Vicki Edwards

Woodsmith® (ISSN 0164-4114) is published bimonthly (Feb., Apr., June, Aug., Oct., Dec.) by Woodsmith Corp., 2200 Grand, Des Moines, IA 50312.
Woodsmith® is a registered trademark of Woodsmith Corp. Copyright© 1993 Woodsmith Corporation. All rights reserved.
Subscriptions: Single copy: $3.95. One year subscription (6 issues), $19.95. Two years (12 issues), $35.95. (Canada/Foreign add $5 per year, U.S. funds.)
Second Class Postage Paid at Des Moines, IA and at additional offices.
Postmaster: Send change of address to *Woodsmith*, Box 10718, Des Moines, IA 50350.
Subscription Questions? Call 1-800-333-5075, 8:00 am to 5:00 pm, Central Time, weekdays.

PRINTED IN U.S.A.

EDITOR'S COLUMN

Sawdust

Early on, I knew one project I wanted to build for this issue was a kid's-size rocker. It was easy to come up with the idea. The hard part was developing the design. It started with some head scratching in a meeting with our designers.

"Anybody have any ideas how big it should be? How about the style? And is there any way we can build it without any wood bending or turning?"

Everyone immediately started offering answers. There were lots of creative ideas and suggestions. But before I knew it, the day was coming to an end, so I suggested we get together again the next morning.

The next day when I walked into the office I found ten small rockers and chairs. Apparently everybody at the meeting the day before remembered that they had a favorite kid's chair hidden away in their attic or basement.

Now we were faced with almost too many ideas. And the challenge was sorting out the best ones.

BRING ON THE KIDS. As I looked at all those empty chairs it reminded me of a deserted playground. I knew there was something missing in our design evaluation process — the kids.

So I put out the word that I wanted anybody with a kid under five to bring them in for a little road testing. (Low tech R&D.)

Days later, in they came. The kids climbed on the chairs, under them, flipped them over to build things, and on a few rare occasions, just sat and rocked. (That's the part the parents liked best.)

On page 16 you'll see the results of all this sophisticated research. The rocker we came up with seems to be a good compromise between a kid and a woodworker. It's strong, hard to tip over, and still easy to build. Though you could use a lathe, we built it from standard dowels with tenons "turned" on the router table. And the curved rockers are two pieces of ¾" stock glued together and cut to shape.

PENDULUM CLOCK. There's also a story behind the Pendulum Clock on page 26. Again, there was a bit of testing involved.

We bought several different clockworks (movements), and as I listened to the bim-bams and melodies, the shop took on the atmosphere of a German clock store at noontime.

The one I liked best was a quartz movement with a clear bim-bam chime. Not a fake electronic sound, but real chimes. Once I picked it out, we built the case around it.

JEWELRY CHEST. The most interesting design challenge in this issue, though, actually started as a technique rather than a project. I wanted to build something with a hump top. Jan, our senior designer, suggested a Jewelry Chest. Okay, Jan, but how do you make the top "humped?"

After trying to apply veneer over a Masonite core (not flexible enough) and a kraft paper core (too many layers), he tried ordinary posterboard. I had my doubts.

But when he showed me a perfectly curved piece of walnut "plywood" that was as strong as any piece of ¼" plywood, I knew he was onto something. So that's what we used on the Jewelry Chest.

AFTER THE FLOOD. In the past few months just about every letter or phone call I've received has asked about how we survived "The Flood of the Century." Though our customer service offices were underwater, the publishing offices (and, yes, the shop and tools) stayed high and dry.

With some incredible effort on the part of a lot of folks here, we quickly moved the customer service phones and computers into the publishing office's building.

Though we're a little cramped, the telephones are getting answered.

NEW FACE. When Julianne, our bookkeeper, recently moved, we were lucky to find a replacement with a similar name. Julie Greenlee will now have the fun job of keeping track of all my receipts.

SHOWS. This year we'll have a representative at many of the woodworking shows around the country. Rob West will be demonstrating some of the tools and kits we sell through our mail order catalog. Occasionally an editor or other staff member will attend, looking for your comments and project ideas. I may even get out to a few shows.

So if you hear we're in your area, stop by and say hello.

Don

A LOOK INSIDE

Contents

Tips & Techniques 4 *Nine tips from fellow woodworkers. 1) "Knurled" Nuts. 2) Board Jack for Workbench. 3) Cutting Grooves on Round Tenons. 4) Wire Brad Holder. 5) Allen Wrench Holder. 6) Pigtailed Power Cords. 7) Dowel Centers. Plus Two Quick Tips.*

Dovetail Box 6 *Instead of chopping out the six small compartments with a chisel, we came up with a technique that works even better.*

Jewelry Chest 8 *This project is a perfect combination of walnut veneer (for the side, back, and top panels) and solid walnut (for the frames, drawers, and base).*

Shop Notes 14 *1) Odd-Size Rabbets. 2) Applying Hardwood Veneer. 3) Decorative Flocking. 4) Nipped Brads. 5) Installing Magnetic Door Catches.*

Child's Rocker 16 *Store-bought dowels make it easy to build this comfortable rocking chair for kids. There's no lathe turning required.*

Favorite Accessories 23 *I'm always on the lookout for a good accessory to make woodworking more accurate, safer, or easier. Here are ten we use most in the Woodsmith shop.*

Pendulum Clock 26 *This wall clock has a quartz movement with a realistic-sounding chime. The clockworks is accessible behind two doors — like a safe behind a picture.*

Sources 31 *Hardware and supplies needed for the projects in this issue.*

Dovetail Box *page 6*

Jewelry Chest *page 8*

Child's Rocker *page 16*

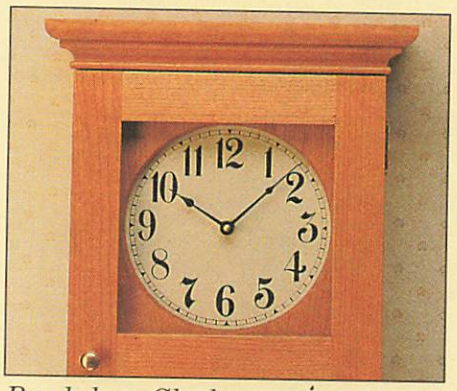

Pendulum Clock *page 26*

Tips & Techniques

"KNURLED" NUTS & A BOARD JACK

Editor's Note: Occasionally, good tips gets delivered in person. **Bill Bittner** *of Spring Valley, Ohio, dropped by the* Woodsmith *shop a few weeks ago for a visit. He shared with us two of his favorite tips.*

"KNURLED" NUTS

■ A "knurled" nut is handier to use than a hex nut. The machined grooves in the side of a knurled nut make it easy to thread the nut on and off a bolt. But it can be difficult locating a knurled nut the desired size — especially for larger bolts.

When Bill is faced with this, he makes his own knurled nut. To do this, he just presses a small nut inside a large nut using a machinist's vise, see Fig. 1.

The inside nut fits the bolt being used. And the outside nut makes it easier to grip and turn with your fingers, see Fig. 2.

BOARD JACK

■ After looking around our shop, Bill noticed that we didn't have a board jack. (A little peg in the side of our bench.)

A board jack is a short length of dowel used for supporting an extra-long board clamped in a bench vise, see drawing below.

To make a board jack, Bill first drilled a 1"-dia. hole in the front of his bench. The top of the hole should align with the top of the vise's guide rods. (So the workpiece will be near level when it's clamped in the vise.)

Then cut a length of dowel rod to fit the hole. To keep from misplacing the dowel, Bill attaches his to the bench with screw eyes and nylon string, see detail.

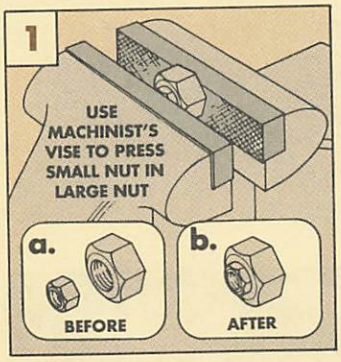

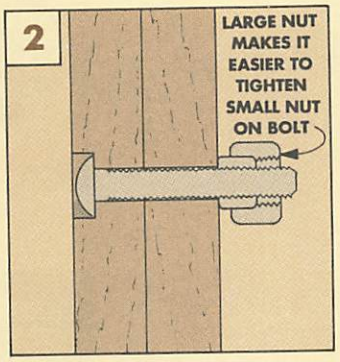

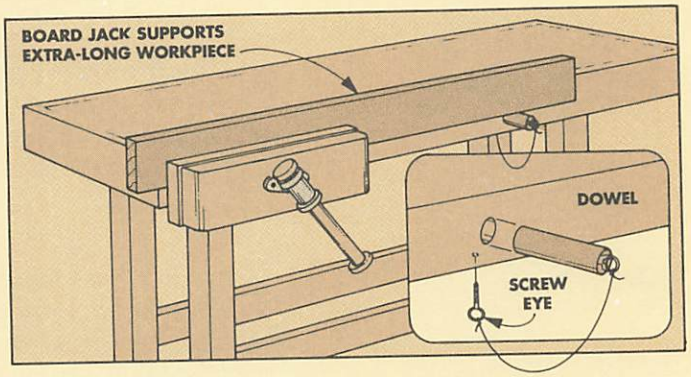

GROOVES ON ROUND TENONS

■ A tenon should fit a mortise snugly. But a good snug fit means the glue can be scraped off the tenon as it's pushed into the mortise. And a glue-starved joint won't hold.

For round tenons, some woodworkers use a dowel fluter. But when I turn round tenons on a lathe, I do something that's a little different.

After completing the round tenon, I cut two or three "V"-shaped grooves in the cheek of the tenon using a parting tool, see drawing. This way, the grooves catch the glue before it can be scraped off the tenon.

Steve Tanner
Ottumwa, Iowa

Editor's Note: Good tip. You could also cut the grooves on the router table by rotating the tenon over a V-groove bit.

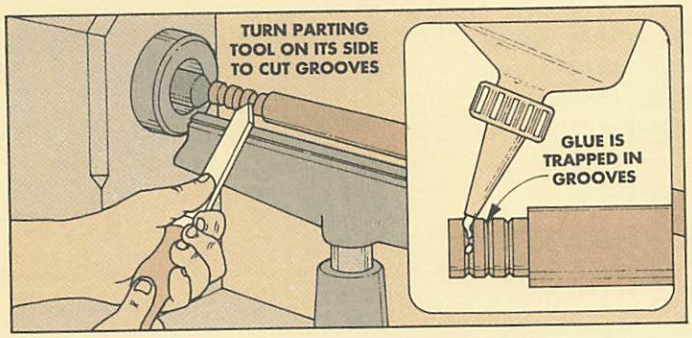

WIRE BRAD HOLDER

■ In the past I've used a needle nose pliers when driving wire brads. But smaller brads tend to slip in the jaws of the pliers. When this happens, the brad usually goes into the workpiece at an angle. To avoid this, I made a magnetic brad holder.

To make the holder, start with a small block of wood, see Fig. 1. Then drill a mortise for a small, round magnet toward one end. Next cut a "V"-shaped notch on the end of the block so the point of the "V" intersects the mortise.

After the magnet is epoxied in the mortise, use the holder by placing the brad in the "V." The magnet holds the brad steady, and the flat bottom of the holder ensures the nail is perpendicular to the work surface, see Fig. 2.

Henry J. Fregly
Tallahassee, Florida

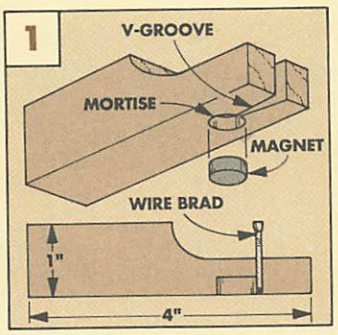

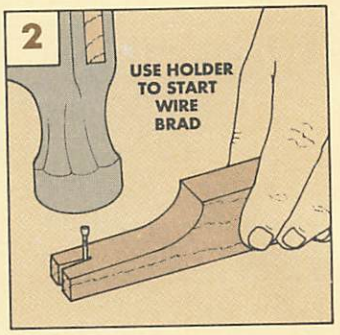

ALLEN WRENCH HOLDER

■ Many stationary power tools come with Allen wrenches for adjustments. In the past, I'd sort through a handful of wrenches to locate the right size for the tool I was adjusting.

To get around this, I now hang the tool's wrench in a small nylon strap screwed to the side of the tool, see drawing. The straps I use are designed for grouping wires inside electronic equipment. They're available at most hardware stores for around 15 cents each.

When mounting the straps, locate them so they'll be out of the way. Note: Use the smallest strap possible so the wrench won't fall through.

Tommy Gunter
Corpus Christi, Texas

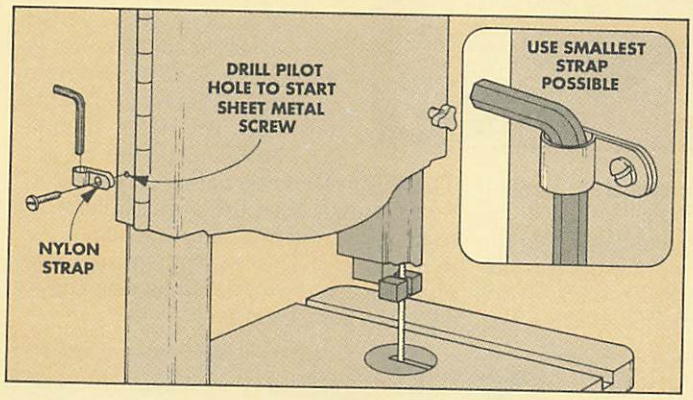

PIGTAIL POWER CORDS

■ To avoid having to wrap up the power cord on my tools after each use, I cut off the cords and made "pigtails," see drawing.

After the cord is removed, just above the strain relief, attach a new male plug — but not the ordinary type. I use a twist-lock plug. Twist-locks won't unplug from the extension cord during use. (You'll also have to replace the female end of an extension cord with a matching female twist-lock connector.)

Twist-lock plugs can be found at many hardware stores. Locally, plugs cost me around $6 each. And a twist-lock connector for the extension cord costs about $10.

Carl J. Dykman
San Antonio, Texas

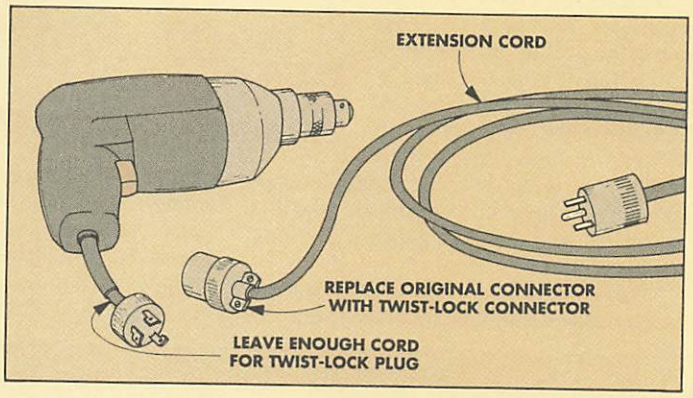

DOWEL CENTERS

■ Dowels are great for keeping boards in alignment. One method for locating the holes for the dowels is to use dowel centers. I do something different. I locate the holes with wire brads.

First locate and mark the dowel locations across the edge of one board, see drawing. Next, drive wire brads (centered on each mark) about half-way into the edge. Now nip off the head of each brad to create sharp points.

To locate the dowel centers in the adjoining board, first line up the ends of both boards. Next, push the two boards together so the points on the brads dig into the edge of the adjoining board.

Remove the brads and drill the holes for the dowels using the brad holes as centerpoints.

James Z. LaPlante
Williamsburg, Virginia

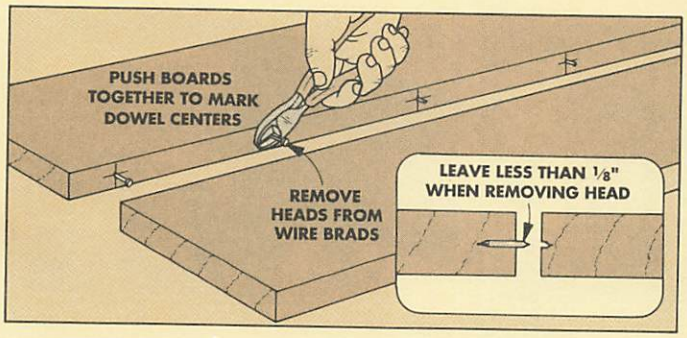

QUICK TIPS

SMUDGE PREVENTER

■ No matter what I do, my projects always seem to end up with oily smudges. To prevent this, each time I enter the shop I rub my hands together in a pile of sawdust. The sawdust does a good job of absorbing the oil from my fingers and hands.

Also, I make it a point to "dust" my hands more thoroughly after a particularly greasy meal.

Jack Burton
Birmingham, Alabama

STICKY CLAMPS

■ There are times when conventional clamps just won't work. When I'm faced with clamping up irregular-shaped objects, I use small strips of duct tape to hold the pieces together.

First, glue the pieces together as you normally would. Then clamp the pieces by stretching narrow strips of duct tape across the joint line.

After the glue dries, remove the tape. Then use lacquer thinner on a soft cloth to clean off any adhesive left by the tape.

Lee Douglas
Elmhurst, Illinois

WE BUY TIPS

If you would like to share an original tip or idea, send it to *Woodsmith*, Tips and Techniques, 2200 Grand Avenue, Des Moines, Iowa 50312. Or if it's easier for you, FAX it to us at: 515-282-6741.

We will pay (upon publication) $25 to $100, depending on the published length of the tip. Please include an explanation, a photo or sketch, *and* a daytime phone number.

Sliding Dovetail Box

A sliding dovetail is a clever way to join a lid to a box. But since the lid isn't actually attached to the box, the challenge is getting the sliding lid to fit perfectly — if it slides in too easily, it will also fall out too easily.

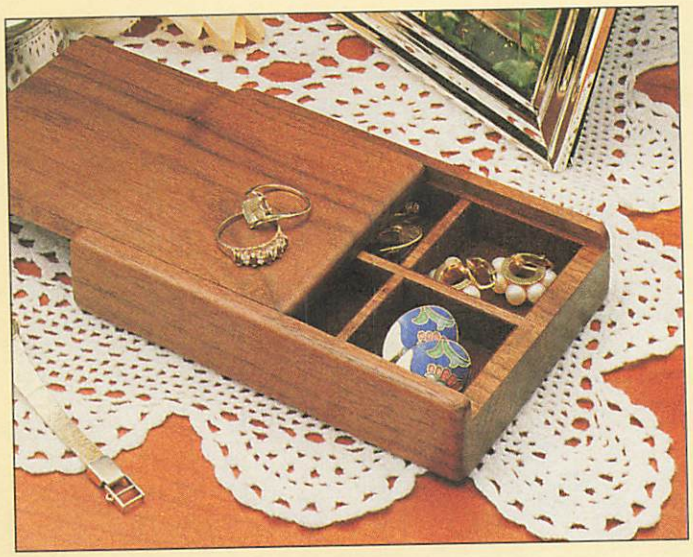

BODY

I began with an extra-long, hardwood blank for a body. Then, I created six compartments by cutting three wide dadoes and adding a divider.

DADOES. To create the compartments, first lay out the position of the dadoes on the edge of a long **body blank (A)**, see Fig. 1. Then raise the dado blade ½" high and make overlapping cuts between the lines to create three wide compartments, see Fig. 2. (Rather than take the time to set up a stop block, I did this by eye — using the miter gauge with a long auxiliary fence.)

Note: A dado blade will usually leave a rough surface. But since I planned to line the bottom of the compartments later, I didn't bother to sand them smooth.

ADD DIVIDER. Now, by adding a thin divider strip, the three wide compartments can be divided into six smaller ones. To accept this divider, first rip a kerf down the center of the blank, see Fig. 1. (The kerf should be the same depth as the dadoes — ½".)

Next, I cut the **divider (B)** to fit into the kerf, leaving it just a bit long, see Fig. 1.

SIDES

With the divider glued in place, the next step is to add two **sides (C)** — ¼"-thick strips with small dovetail-shaped rabbets, see Fig. 1a. (To make them safer to handle, both side pieces are cut from one long blank, see Fig. 3.)

DOVETAIL RABBET. I cut the dovetail rabbet on the router table, see Figs. 3 and 3a. To do this, raise the dovetail bit ¼" above the surface of the table. Then adjust the fence so the bit just barely nicks the lower corner of the blank.

CUT TO SIZE. After the dovetail rabbet has been routed, the two side pieces can be cut from the blank. This is a two-step procedure. First, cut a kerf with the blank standing on edge, see Figs. 4 and 4a.

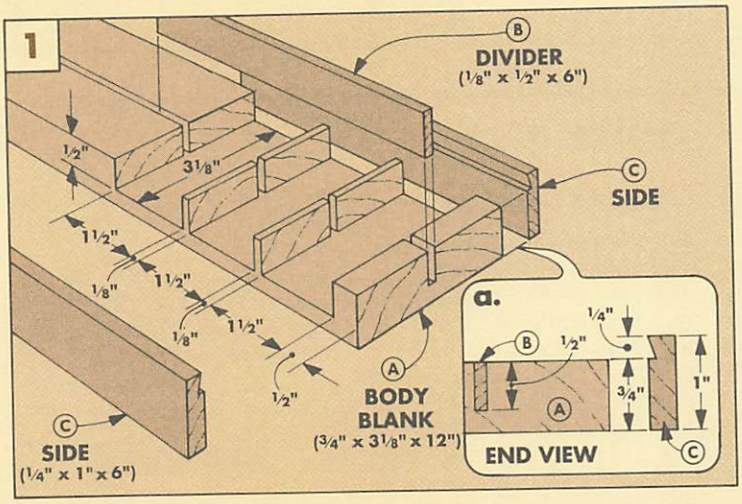

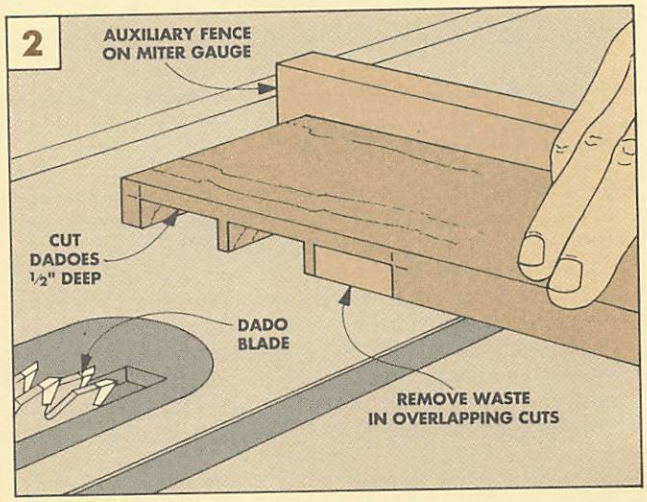

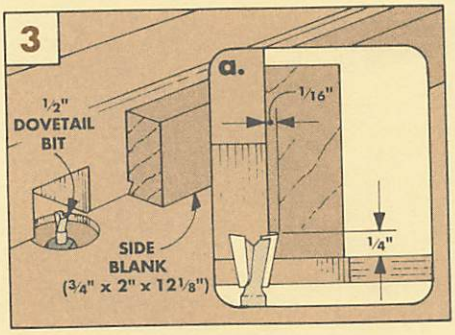

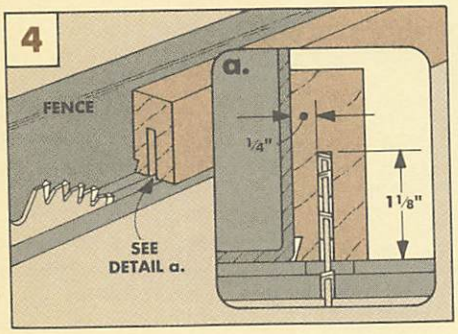

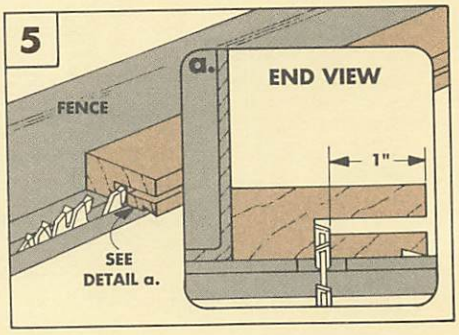

Next, lay the blank on the table and remove the side pieces, cutting them to finished size, see Figs. 5 and 5a. (Safety Note: To prevent kickback, the finished workpiece should fall on the *waste* side of the blade.) The goal is to cut the side pieces so the width equals the height of the dovetail (¼") *plus* the thickness of the body (¾").

ATTACH SIDES. Now, cut the two side pieces to rough length. And glue them to the body so the shoulders of the rabbets align with the top of the body, see Figs. 1a and 6.

At this point, I trimmed the body, divider and side pieces to finished length, see Fig. 7.

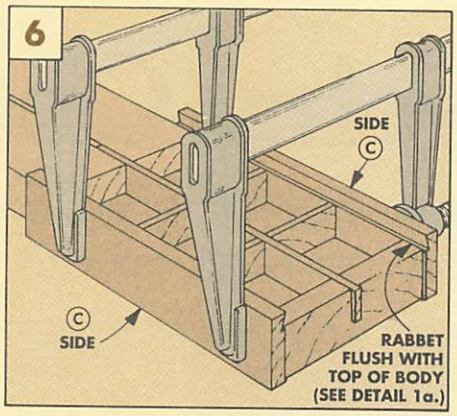

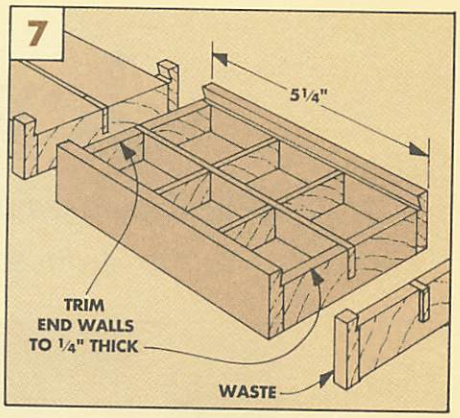

LID

For a good fit, the lid has to be the correct width, and the bevels on the side pieces and lid have to match. Cutting the lid wide and sanding it to fit takes care of the width, and to keep the proper angle on the bevel, I made a little sanding block, see the box below.

Start by ripping the **lid (D)** to rough width. (The thickness should equal the height of the dovetail rabbets — ¼".)

To create the bevels, tilt the table saw blade to match the angle of your dovetail bit (in most cases, 14°). Then bevel one edge and sand it smooth, see Fig. 8 and box below.

Next, mark the final width of the lid. Now comes the important part. Rip the second bevel, but cut just a hair *outside* the mark. Then sand the bevel a little bit at a time. Keep checking as you're sanding until it fits the body perfectly. (You want to avoid sanding so much that the lid slides too loosely.)

After the lid has been cut to length, slide it in the box and tape it in place, see Fig. 9. Then, round over all the edges, see Fig. 9a. Shop Note: To prevent chipout on the side pieces, round over the ends first.

To complete the box, I finished it by wiping on a couple coats of tung oil. (Be sure to finish *both* faces of the lid, or it'll warp and won't fit properly.) Also, I lined the compartments with a suede-like liner. (For more on this liner, see page 15.)

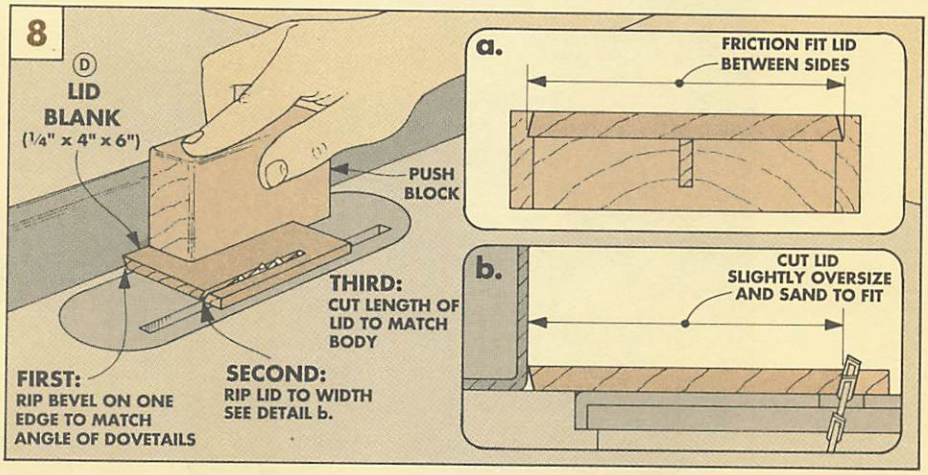

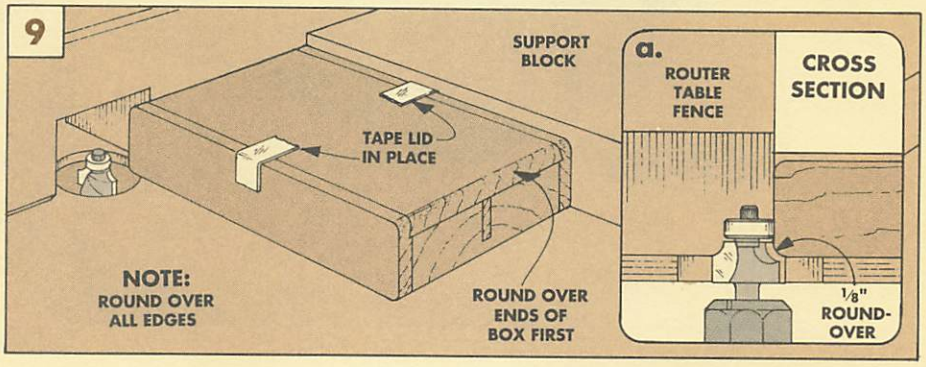

SANDING BLOCK

For the lid to slide smoothly, the beveled edges must match the side bevels perfectly. To do this, I used a sanding block.

This sanding block is just a scrap piece with one side beveled to match the sides of the lid. I used adhesive-backed sandpaper (but you could use regular sandpaper and attach it to the block with rubber cement or double-sided tape).

To use the sanding block, hold the block on a flat surface with sandpaper facing up. Then rub the beveled sides of the lid against the sandpaper.

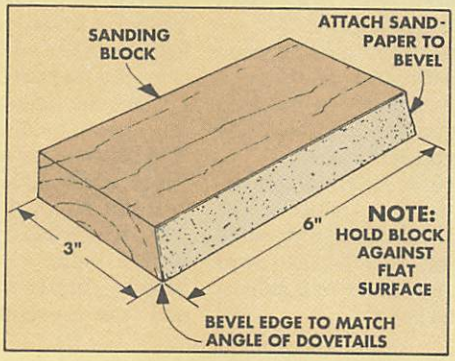

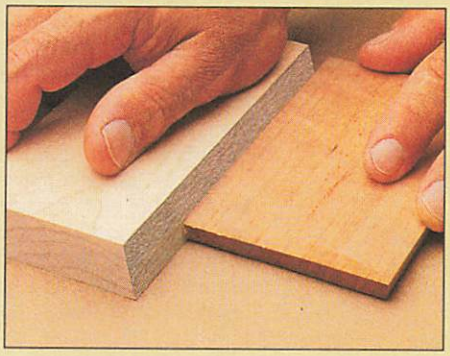

Jewelry Chest

When you need a curved piece of plywood, sometimes it's easier to start from scratch than it is to bend a store-bought piece.

Bending plywood can be tricky. For this Jewelry Chest, I wanted to avoid the extra work that steam or kerf bending requires. So I decided to *make* a piece of curved plywood instead. (It's actually easier than it sounds.)

Another reason for making my own plywood was visual. Most hardwood plywood has one good face, and one face covered with a lower grade veneer. But I wanted the lid of this Chest to look good on both sides, whether it's open or closed.

LID. To make my own curved plywood for the lid, I started with a piece of walnut veneer for the inside and outside faces. Then I experimented with a number of different materials for the core. I ended up using the least expensive grade of "wood" I could find — posterboard.

One nice thing about using posterboard is that it bends easily without breaking. And when glued into "plies," posterboard is surprisingly strong.

BACK & SIDE PANELS. After buying the veneer for the lid, I realized there was going to be enough left over to veneer the side and back panels for the case. But they aren't made the same as the lid.

Since the sides and back aren't curved, I glued the veneer to Masonite instead of posterboard. And because the inside faces aren't visible, I only veneered the outside face.

LINER. If you look at the inset photo above, you'll notice that the drawers are lined. First, I cut a piece of mat board slightly undersize to fit each drawer. Then I covered the mat board with batting and satin — wrapping the satin over the edges.

EXPLODED VIEW

MATERIALS

CASE

A	Back Panel (1)*	1/8 x 8 - 6 1/2
B	Side Panels (2)*	1/8 x 4 1/2 - 6 1/2
C	Back Pnl. Veneer (1)	8 1/2 x 7 rgh.
D	Side Pnl. Veneers (2)	5 x 7 rgh.
E	Back Stiles (2)	1/2 x 2 - 10
F	Side Stiles (4)	1/2 x 2 - 10
G	Back Rails (2)	1/2 x 2 - 8
H	Side Rails (4)	1/2 x 2 - 4 1/2
I	Case Front (1)	1/2 x 2 - 11 1/2
J	Dust Panels (4)*	1/8 x 7 3/16 - 11 3/8
K	Comp. Btm. (1)*	1/8 x 7 3/8 - 11 3/8
L	Drawer Guides (6)	3/16 x 1/2 - 4
M	Kickers (2)	1/4 x 3/8 - 7

BASE

N	Sides (2)	3/4 x 1 - 8 1/4
O	Front (1)	3/4 x 1 - 12 1/4
P	Back (1)	3/4 x 1 - 12 1/4

DRAWERS

Q	Fronts (4)	3/4 x 1 15/16 - 11 3/8
R	Backs (4)	1/2 x 1 13/16 - 10 7/8
S	Sides (8)	1/2 x 1 13/16 - 6 5/8
T	Bottoms (4)*	1/8 x 6 5/8 - 10 3/8

LID

U	Sides (2)	1/2 x 2 1/2 - 8
V	Front (1)	1/2 x 1 3/4 rgh. - 12
W	Back (1)	1/2 x 1 3/4 rgh. - 12
X	10-ply Pstrbd. Pnls. (3)	9 1/4 x 12 1/2 rgh.
Y	Panel Veneers (2)	9 1/4 x 12 1/2 rgh.

*Cut from tempered Masonite

SUPPLIES

- (1) Walnut Veneer 24" x 24"
- (8) 7/16"-Dia. Brass Knobs
- (2) 1 1/4" Brass Stop Hinges w/Screws
- (1) 1/16"-Thick Mat Board 12" x 14"

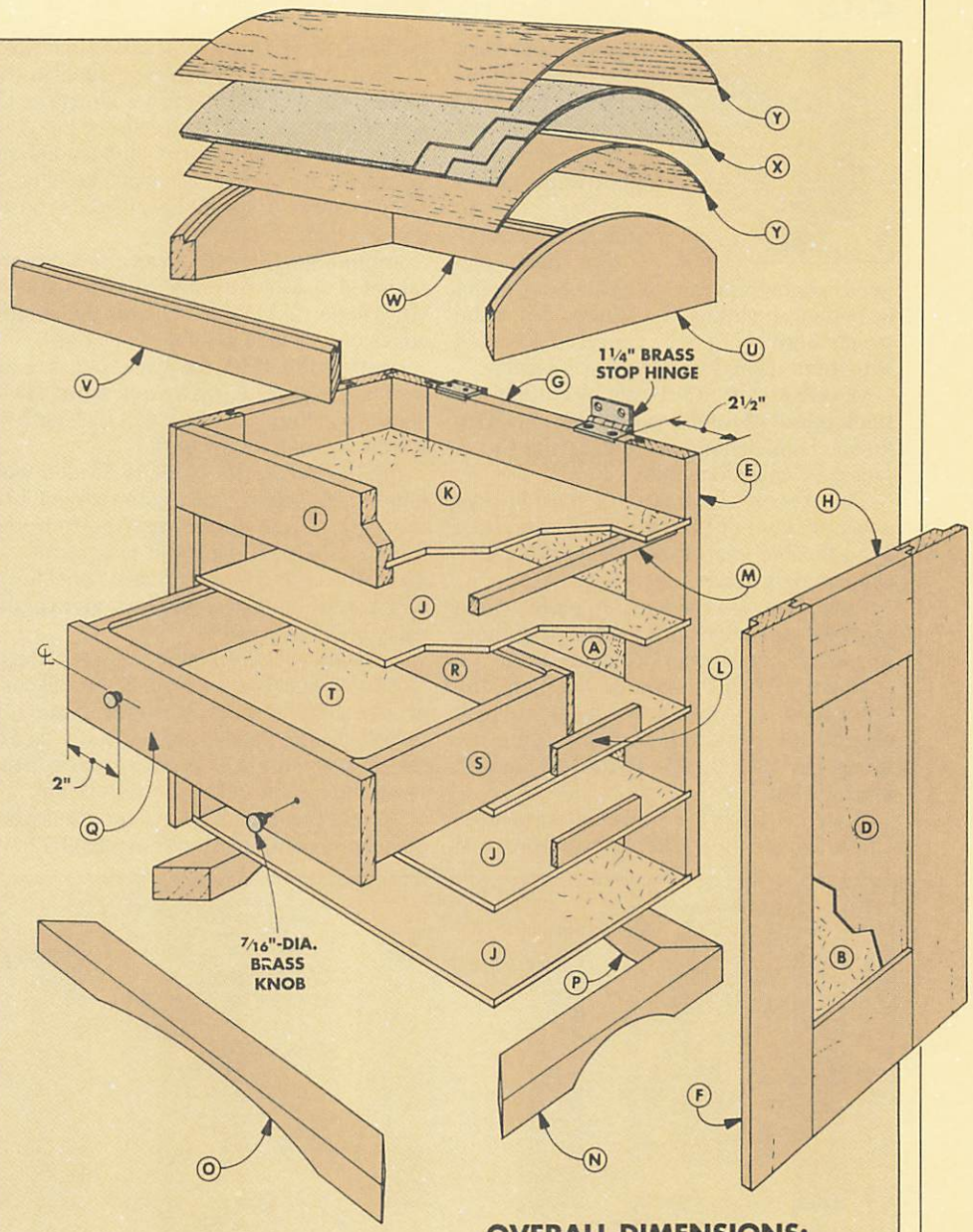

OVERALL DIMENSIONS:
12 1/4"W x 8 1/4"D x 13 1/4"H

CUTTING DIAGRAM

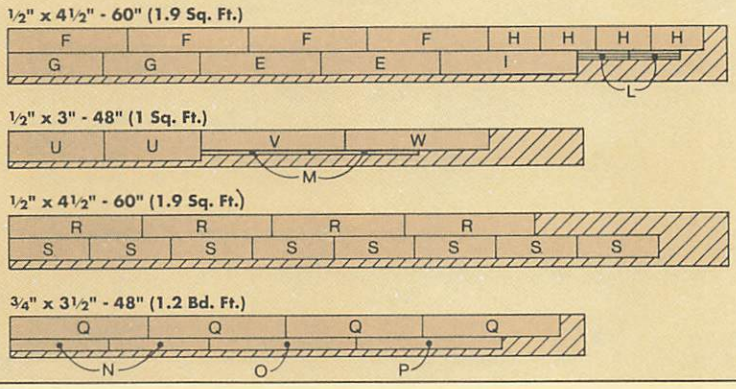

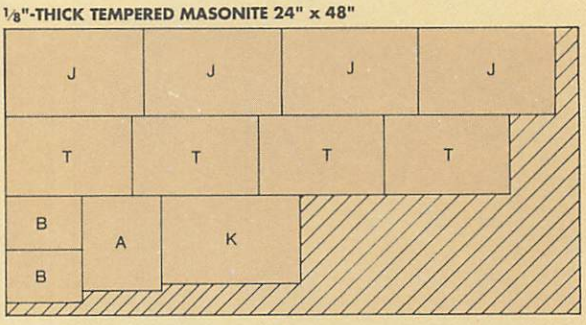

NOTE:
ALL HARDWOOD PARTS ARE CUT FROM WALNUT

CASE

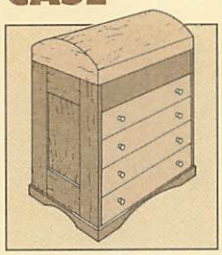

The sides and back to this Jewelry Chest are framed panels—with stub tenon and groove joinery holding the frame pieces together. When building framed panels like these, you need to know how thick the panels are going to be before cutting the joinery. Since the panels were going to be veneered, I started with them. Then I moved on to the frame.

VENEERED PANELS. Begin by cutting one **back panel (A)** and two **side panels (B)** to finished dimensions, see Fig. 1. (For these, I used 1/8"-thick Masonite.)

Then to cover each piece of Masonite, cut a piece of **veneer (C, D)** slightly oversize. I used flexible veneer, see the Cutting Diagram at right and Sources, page 31.

After the veneer is glued in place, trim it flush with the edges of the panel. (For more on gluing veneer, refer to page 14.)

FRAMES. With the panels complete, the stiles and rails of the frames can be cut to fit around the panels. Begin by cutting the **stiles (E, F)** and **rails (G, H)** to finished size, see Fig. 1.

Note: I cut all of the hardwood parts to the Chest (except the thicker drawer fronts and the base pieces) from 1/2"-thick walnut.

Then to hold the veneered panels in the frames, cut a centered groove along the inside edge of each stile and rail, see Fig. 2.

After the grooves are cut, stub tenons can be cut on the ends of each rail, see Fig. 2. Then all three frame-and-panel units can be glued up and assembled.

RABBET SIDE FRAMES. Now the sides are rabbeted to accept the back and a case front (I). These rabbets are cut on the inside edges of each side assembly, see Fig. 3.

CASE FRONT. With the back and side assemblies complete, rip a **case front (I)** to width, see Fig. 3. Then cut it to length to match the width of the back.

DUST PANELS. The chest is divided with four dust panels (J) and a compartment bottom (K). The compartment bottom and three of the dust panels fit in grooves cut inside the case. The fourth dust panel fits in a rabbeted edge cut along the bottom of the case, see Figs. 3 and 4.

I cut the grooves and rabbets 3/16" deep. Normally, one pass over the blade will cut a groove to fit 1/8"-thick Masonite. Note: Cut the grooves and rabbets on the *inside* face of the sides and back. Also, cut a groove on the *inside* face of the case front (I), see Fig. 3.

To find the dimensions of the **dust panels (J)** and **compartment bottom (K)**, I dry assembled the case, refer to Fig. 4. And then I cut the pieces to finished size.

CASE ASSEMBLY. Next, glue and clamp the case with the dust panels in place, see Fig. 4. Shop Note: I used a spacer block to help keep the case square. This spacer is cut to the same length as the case front (I).

DRAWER GUIDES & KICKERS. To prevent the drawers from catching the side panels, I installed two drawer guides (L) in the top three drawer compartments, see Fig. 4. After the **guides (L)** are cut to fit between the stiles in the side panels, glue them in place.

CUTTING DIAGRAM

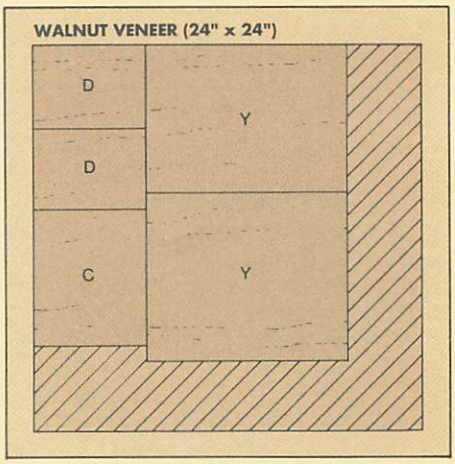

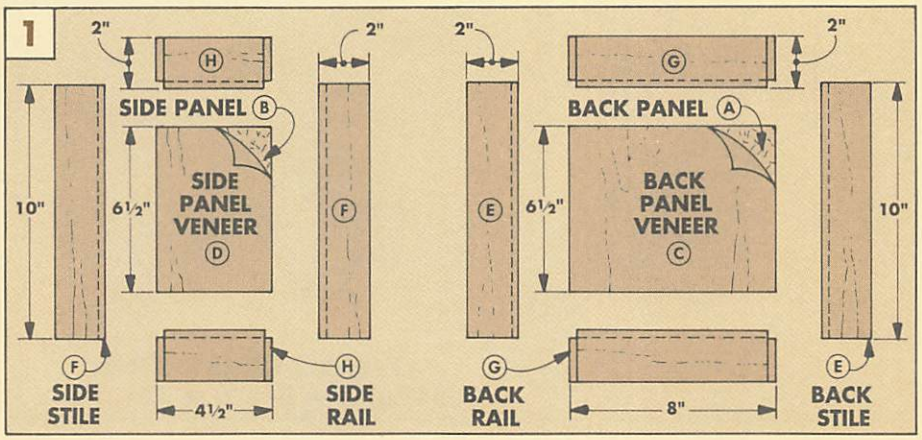

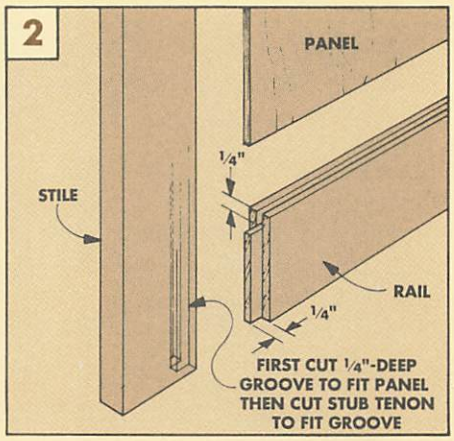

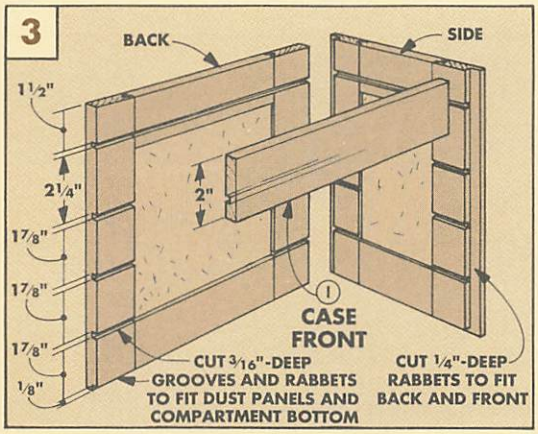

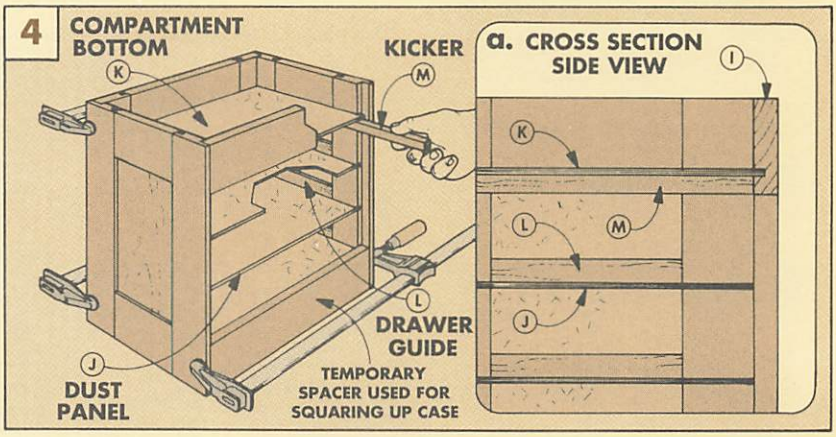

To keep the top drawer from "kicking up" when it's pulled out, glue two **kickers (M)** to the compartment bottom (K), see Fig. 4. Note: Glue the kickers to the compartment bottom only. This will allow the sides to expand and contract with changes in humidity.

BASE

With the case complete, the next step is to add a ¾"-thick mitered base.

BASE PIECES. To begin on the base, first rip enough stock to finished width (1") for all the base pieces, see Fig. 5.

Next, measure the width and depth of the case (near the bottom dust panel). Then add ¼" to each measurement to determine the length of the base pieces. Now miter the base **sides (N)**, **front (O)**, and **back (P)** to finished length, see Fig. 5.

ARCS. At this point, the base could be glued to the bottom of the case. But to add a decorative touch and allow finger space for picking up the chest, I cut an arc on each base piece.

To lay out the arcs, I made two templates out of posterboard. First, cut one piece of posterboard to the same length as the base front and back, see Fig. 6. Then cut another piece of posterboard to equal the length of the base sides.

Now an arc can be laid out on each template. To do this, first draw a line along the length of the template, see Fig. 6. Then nail two small wire brads on this line.

Next, draw a centerline between the brads and make a mark ¼" from the top edge. Bend a flexible straightedge (such as a piece of posterboard) to this mark and draw the arc. Then cut the templates out and trace the arc onto the base pieces, see Fig. 5.

ASSEMBLY. After the arcs are cut, sand them smooth. Then glue and clamp the base pieces together. Once the glue dries, glue the base to the bottom of the case and the bottom dust panel, see Fig. 7.

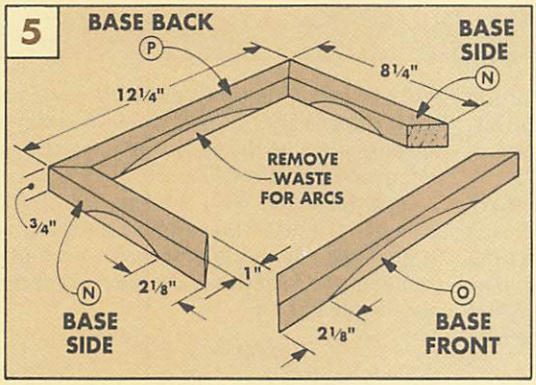

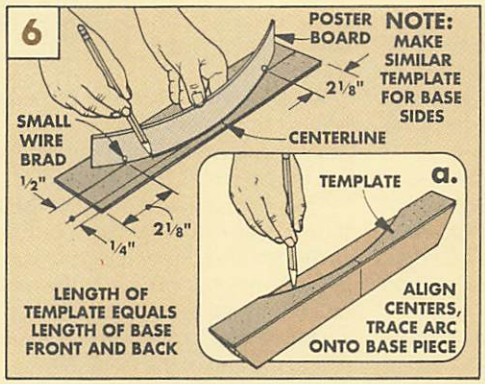

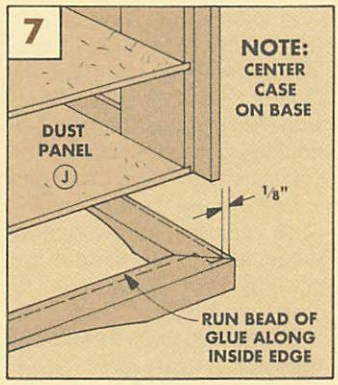

DRAWERS

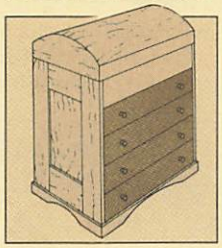

The drawers in this chest look like simple rabbeted drawers. But because the drawer fronts act as drawer stops, I began with them.

FRONTS. Begin by cutting the drawer **fronts (Q)** to size. They're cut ⅛" shorter than the opening in the front of the case (rabbet-to-rabbet), see Fig. 8. This allows a 1/16" gap on each side, see Fig. 8a.

To keep the drawer fronts flush with the front of the case, rabbets are cut along the sides and bottom edge of each drawer front, see Figs. 8a and 8b. (The bottom rabbet also hides the dust panel.) Note: When cutting the rabbets, sneak up on the depth, testing the fit until each front is flush with the case, see Fig. 8a.

BACKS AND SIDES. Now, cut the **backs (R)** and **sides (S)** to size. Then cut ¼"-deep rabbets in each back (R) to accept the sides.

To hold the bottom (T) in place, cut a groove on the *inside* face of each drawer piece, see Fig. 8. (Since the drawer front isn't flush at the bottom, reference the top edges when laying out the grooves.)

BOTTOMS. Once the **bottoms (T)** are cut to size, glue and clamp the drawers together. Then chamfer the top, *inside* edges to soften the sharp corners, see Fig. 9.

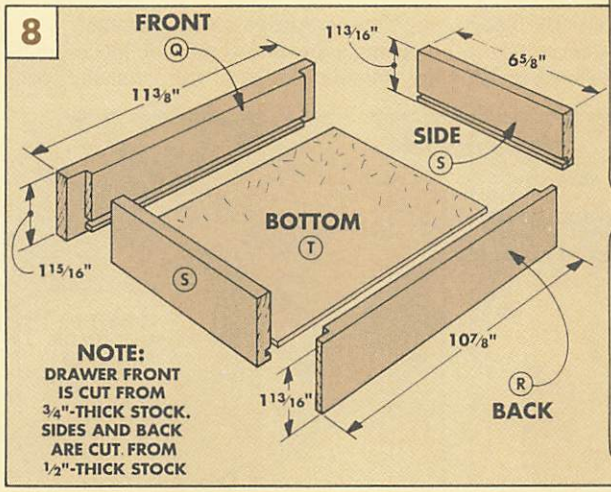

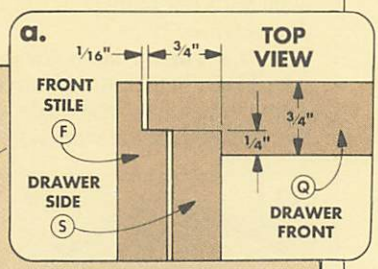

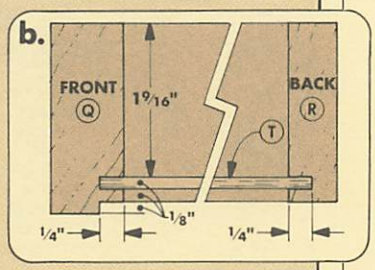

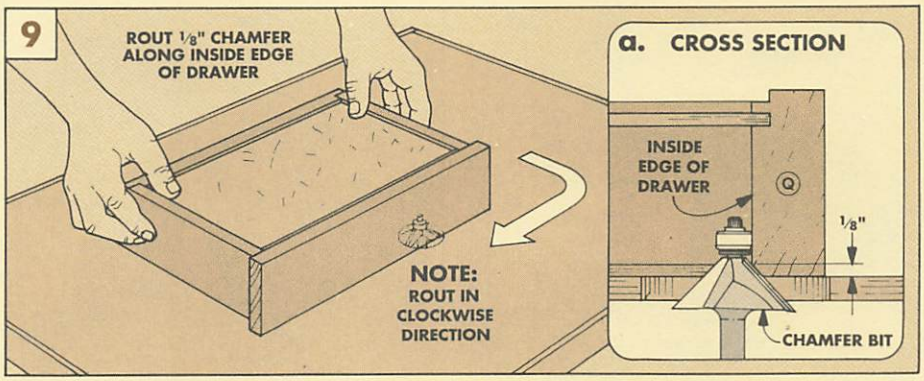

CURVED LID

After installing the drawers, work can begin on the lid. The lid is basically a mitered frame with curved sides.

LID FRAME

To begin on the lid frame, first rip the **sides (U)** to finished width, see Fig. 10. Then rip the **front (V)** and **back (W)** to rough width.

Next, miter the pieces to length to fit on top of the case, see Fig. 10.

CURVED SIDES. Now the curved edge on the lid sides (U) can be cut, see Fig. 10. First, lay out the arc on one of the blanks. Then, to ensure that both pieces end up with the same shape, tape the blanks together with double-sided carpet tape.

Once the arcs are cut out on the band saw, sand the curved edges smooth. Then complete each lid side by routing a 3/16"-deep rabbet for the curved top on the *inside* edge, see Fig. 11. (For more on this, see Shop Notes, page 14.)

RABBETING FRONT & BACK. Now comes the trickiest part of the project — cutting rabbets in the lid front (V) and back (W) to align with the rabbets in the sides. This is done in three steps.

First, set up the table saw with a 1/4"-wide dado blade tilted to 40°. Next, raise the blade so the lowest tip of the blade is centered on the thickness of the workpiece, see Fig. 12. Then position the rip fence 1/8" away from the blade.

Now check the setup by cutting a groove on a piece of scrap. If necessary, readjust the fence or blade. After you're satisfied with the setup, cut a groove across the *inside* face of both the lid front (V) and back (W), see Fig. 12. This completes the first step.

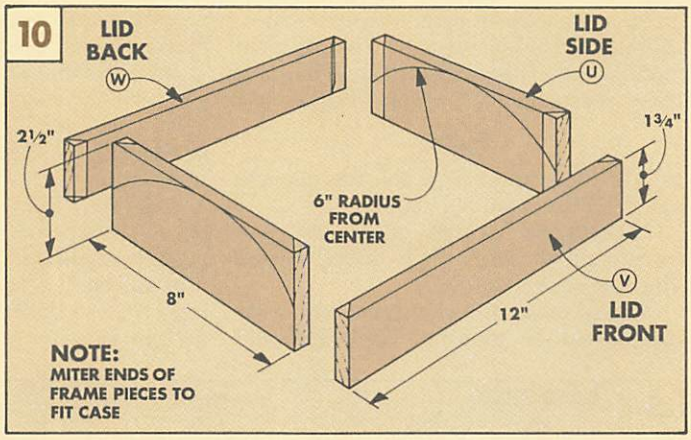

MARK RABBET. Now the top edge of the rabbet can be marked and cut. But to do this, you'll first have to figure out where to position the rip fence. Here's how.

First, hold a mitered end of the front (V) and one side piece together, see Fig. 13. Line up the bottom edge of the groove in the front (V) with the bottom edge of the rabbet in the side (U). Once the two are lined up, transfer the location of the curved edge on the side (U), to the end of the front (V).

Next, set up the table saw, using the mark on the front to position the rip fence, see Fig. 14. Now trim off the notched edge of both the front and back to create the 3/16"-deep rabbet. This completes the second step.

Again, using one of the side pieces, mark the finished width of the front and back pieces. Only this time, mark the bottom edge, refer to Fig. 13a. After you've marked the pieces, set up the table saw to trim them to finished width, see Fig. 15.

GLUING FRAME. With the front and back pieces complete, all that's left on the frame is to glue and clamp it together. To keep the frame square, I used the case and four corner blocks, see Fig. 16.

BENDING JIG

Now the lid frame is ready for a curved top. Making this top may seem difficult. But it's not. All you need is a simple bending jig, some posterboard, and veneer.

BENDING JIG. The bending jig consists of a frame made of two curved **ends** and two **support bars,** see Fig. 17. And a **clamping**

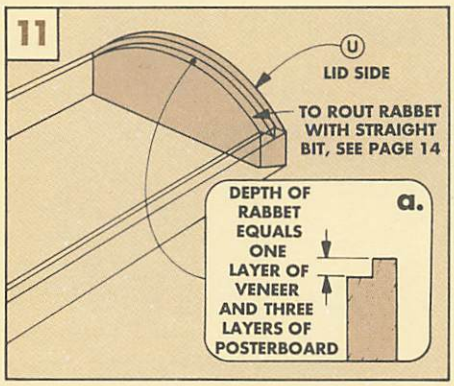

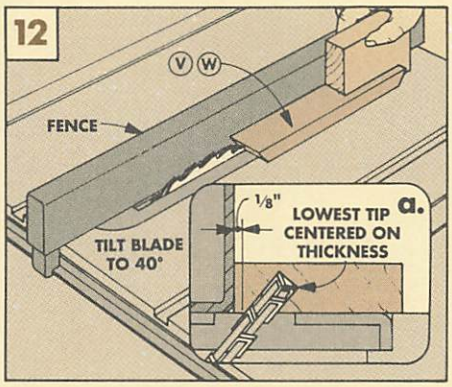

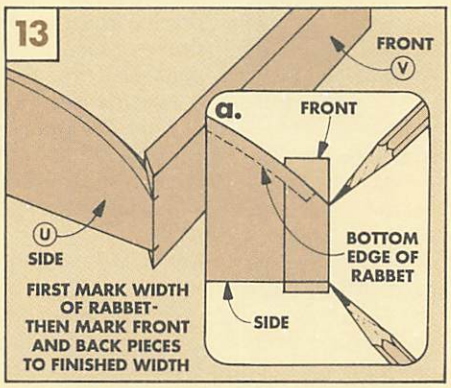

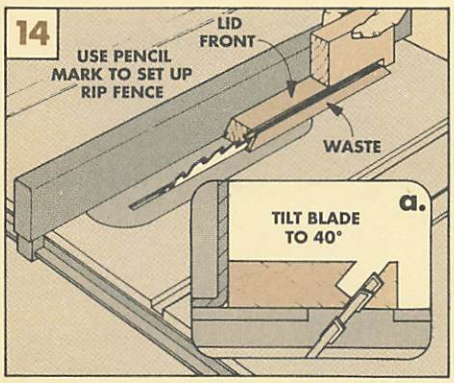

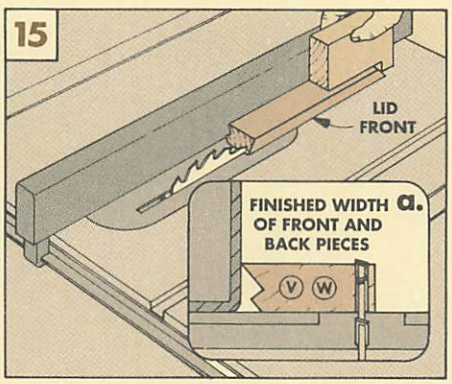

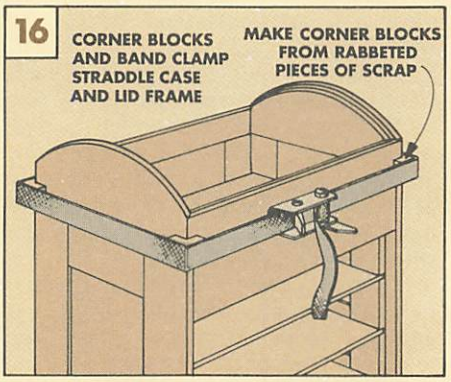

form made of one layer of 1/16"-thick mat board. (Mat board is available at art supply stores for about $2 a sheet.) The form is bent over the frame and stapled down. Note: To prevent glue from sticking to the mat board, I covered it with two coats of polyurethane.

CURVED TOP

To make the curved top, begin by cutting three pieces of 10-ply posterboard for the core. Cut these slightly larger than the rabbeted opening in the lid frame, refer to the Exploded View on page 9.

Now glue three layers of **posterboard (X)** together. You want to cover each surface with enough yellow glue so the posterboard bends easily, see Fig. 18. Then clamp the core to the jig, see Fig. 19. When the core dries, it will hold the shape of the form.

VENEER. Now, glue an oversize piece of **veneer (Y)** to the bottom of the core, see Fig. 20. For more on this, see page 14.

INSTALL CORE. Next, cut the core to fit the rabbets in the lid frame, refer to the Exploded View. To cut the core, I used a flexible straight edge (a scrap piece of posterboard) and the jig, see Figs. 21 and 22. Then glue the core in the frame, see Fig. 23.

After the core is glued in place, you may find that the core and the curved sides (U) aren't flush. If this is the case, lightly sand the curved edges or the core until they're flush. Also, fill any holes or blemishes with wood filler. (Be sure to fill any gaps between the core and the sides as well.) Once the filler dries, sand the surface smooth again.

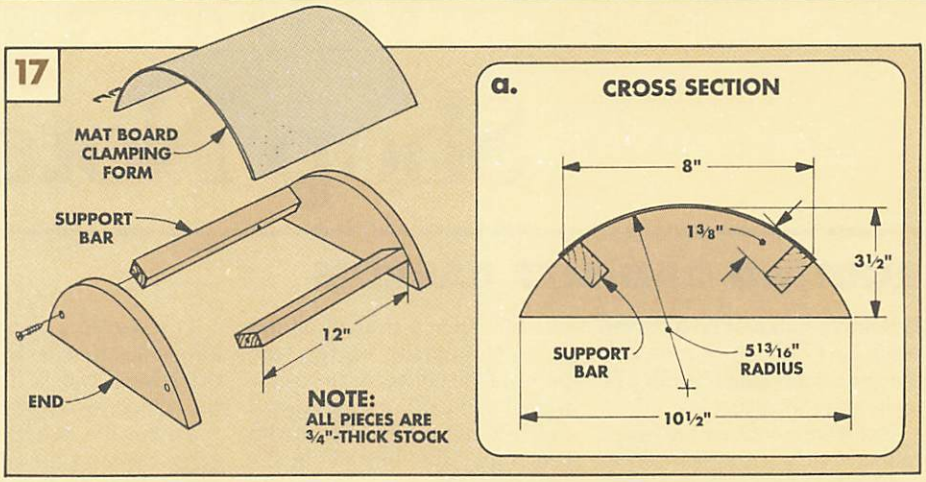

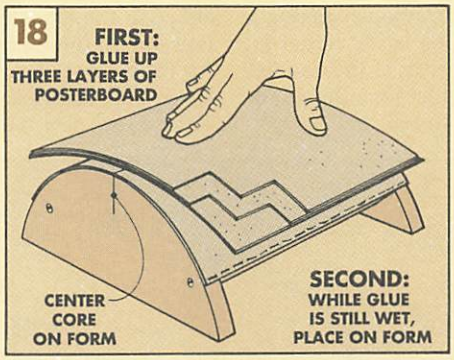

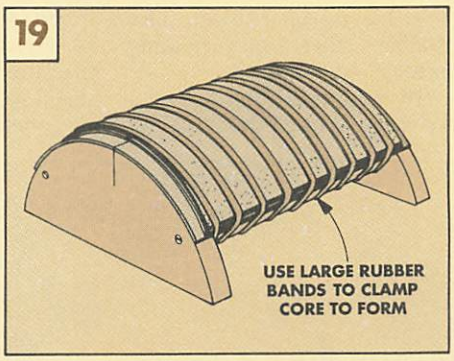

VENEERING LID. Now the lid is ready to be veneered. First cut a piece of **veneer (Y)** slightly oversize to cover the core and the frame. Then glue it in place, see Fig. 23. Next trim the veneer to finished size, see Fig. 24.

FINISH & HARDWARE. Next, to protect all the wood parts, I wiped on three coats of Sam Maloof Oil/Wax Finish. Then to complete the Chest, install the knobs and hinges, see Fig. 25 and the Exploded View.

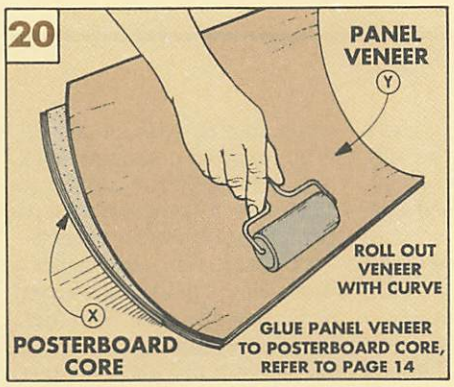

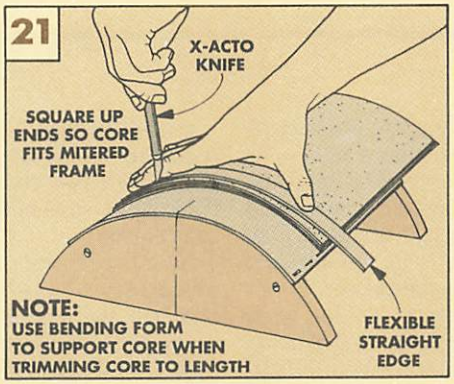

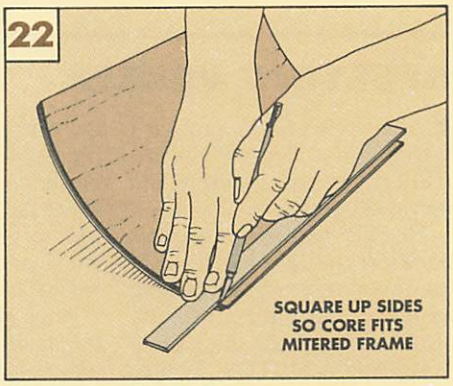

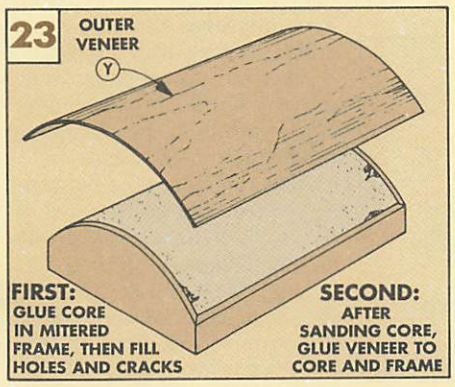

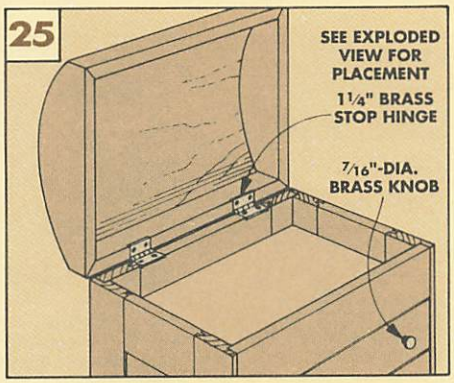

Shop Notes

ROUTING ODD-SIZE RABBETS

■ Routing a rabbet on a curved piece isn't difficult. A router table and a rabbeting bit with a pilot bearing work just fine.

But what about an odd-sized rabbet? Such as the side pieces on the Jewelry Chest lid. They require a 3/16" rabbet. The trouble is, there's no such thing as a 3/16" rabbeting bit.

To get around this, I used a 1/4" straight bit in the router table. But since a straight bit has no pilot bearing on top, the depth of the cut needs to be controlled some other way. How? I used a zero-clearance fence with the router bit "buried" in the fence, see Fig. 1.

ADJUST BIT. After mounting a 1/4" straight bit in the router table, raise the bit to the desired height (width), 1/4" for the side of the Jewelry Chest, see Fig. 1a.

CUT NOTCH. The zero-clearance fence I used is a scrap piece of plywood with a notch cut in the center, see Figs. 1 and 1a.

To cut the notch, clamp the scrap piece to the router table fence. Then turn on the router and push the fence into the bit until 1/16" of the bit is buried in the fence, see Fig. 1a. (This leaves 3/16" exposed to cut the rabbet to the desired depth.)

Next, clamp the fence to the table. Then draw a line on the fence directly over the center of the bit. (This is a reference mark for routing the rabbet.)

ROUT RABBET. Now you can rout the rabbet in the usual right-to-left direction, see Fig. 2. For the most uniform-size rabbet, concentrate on keeping the piece in contact with the pencil mark on the fence while routing.

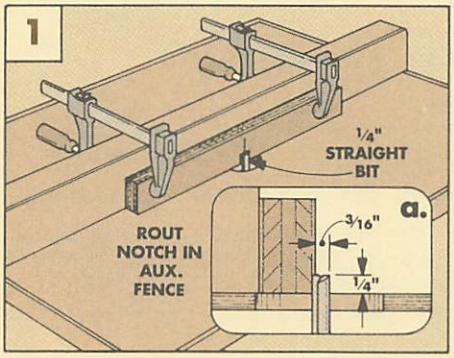

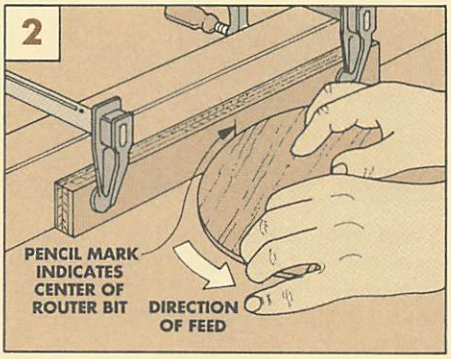

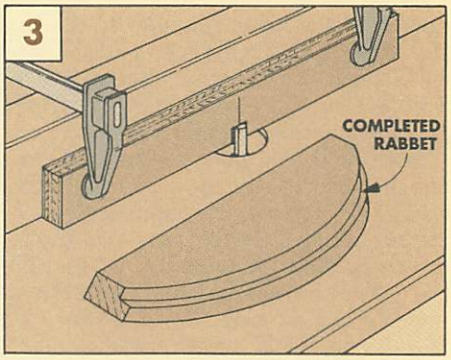

APPLYING VENEER

■ When veneering a project, I typically use flexible veneer. (Other types are available, but they don't work as well.)

Flexible veneer has a paper backing that keeps the thin hardwood veneer from cracking as it's rolled onto a project. (Don't try to remove this paper.)

PREPARING SURFACE. Before applying the veneer, clean up the substrate. (The substrate is the material that a veneer is glued to.) For the best bond, the substrate must be smooth and free of voids. If there are any voids or gaps in the surface, wood filler is the answer.

After applying a filler, sand the surface smooth. Then, remove any dust by wiping the surface with denatured alcohol.

CONTACT CEMENT. Now, cover both the veneer and the substrate with two coats of nonflammable, solvent-based contact cement.

After the cement dries (turns from glossy to dull — in about 15 minutes), the veneer is ready to be applied to the substrate.

One word of caution. As soon as the two cemented surfaces touch, they're stuck for good.

So, to avoid premature sticking, first cover the dried substrate with a sheet of waxed paper. Then position the veneer.

BUBBLES. When the veneer is down, slowly pull out the waxed paper (like the table cloth trick, but in slow motion), see Fig. 1. As you're removing the paper, flatten the veneer with a roller. This improves the glue bond and squeezes out air bubbles.

After the waxed paper is removed, I roll out the veneer again, starting in the center and rolling towards the edges.

After rolling out the bubbles, the veneer can be trimmed to the edges of the workpiece with an X-Acto knife, see Fig. 2.

Shop Note: Before trimming the edges, inspect the grain direction on the veneer. Then cut *with* the grain to avoid tear-out.

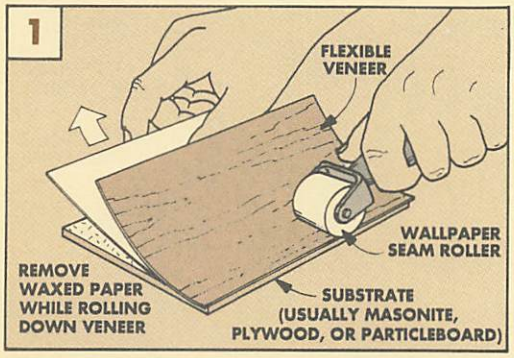

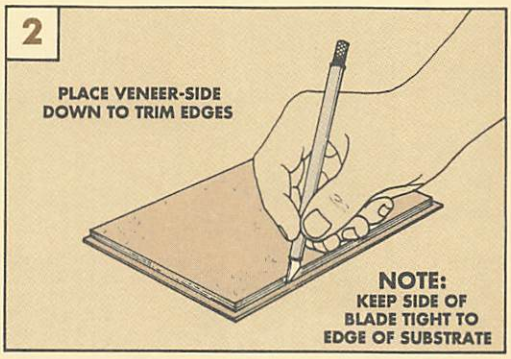

DECORATIVE FLOCKING

■ One of the easiest ways to dress up a small box is to line the inside with fabric. But for the compartments in the Sliding Dovetail Box (shown on page 6), I decided to use a product called Suede-Tex.

First of all, Suede-Tex isn't a fabric. It's a decorative flocking made from whisker-size sprinkles of rayon fiber. But after it's applied it looks just like a fabric lining. (For sources of Suede-Tex, see page 31.)

Note: Decorative flocking should be applied *after* a project is finished. (A finish could discolor the fibers.)

APPLY PAINT. To apply Suede-Tex, first carefully paint the area you want to cover, see Fig. 1. Suede-Tex makes an undercoat adhesive for this purpose. It matches the color of the fibers. (Some oil-based enamels may work as an adhesive, too.)

SPRAY FIBERS. While the adhesive is still wet, the fibers are blown on with an applicator, see Fig. 2. This shoots the fibers into the paint so they stand up like a week's growth of whiskers. (A kitchen strainer or sifter can be used instead of a pump applicator to spread the fibers .)

LET DRY. After the flocking has been applied, let the material dry overnight. Then simply dump out the excess fibers.

Artificial flocking material comes in several colors with matching paint-on adhesive. It's applied with a spray pump.

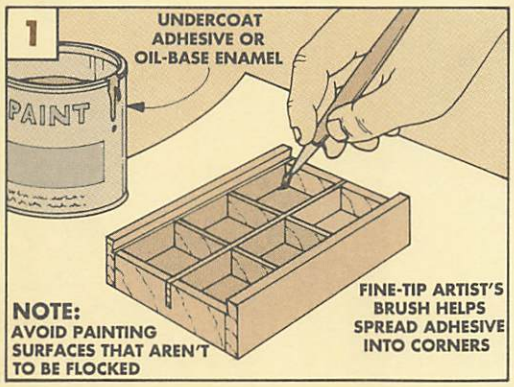

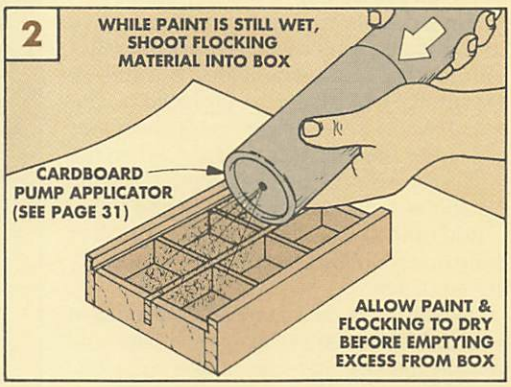

NIPPED BRADS

■ Right out of the bottle, yellow glue is slippery stuff. This can be a problem when you're trying to glue and clamp several pieces together all at one time.

The solution is to drive a couple brads between the layers, see Fig. 1. Then nip the heads off the brads, see Fig. 1a.

Now, carefully position the pieces and press them together. The brads keep the pieces from slipping out of alignment after the glue and clamps are applied.

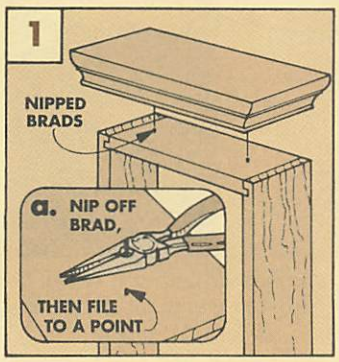

INSTALLING MAGNETIC CATCHES

■ Installing barrel-type magnetic catches can be tricky — the hole for the magnet must be drilled an exact diameter and depth.

HOLE DIAMETER. To install the magnet on the Pendulum Clock on page 26, I drilled a 5/16"-dia. hole. The hole should *actually* have been 8mm in diameter, but I didn't have a metric drill bit. (The magnet I used was made to metric specifications.)

HOLE DEPTH. The depth of the hole is also critical. If the hole is too shallow, the magnet will bottom out in the hole and the door won't close completely.

So I drilled the hole a little *deeper* than necessary (5/8" for the 9/16"-long magnet). Then, when installing the magnet, I used a small block to keep from driving it in too far, see Fig. 1a. (There's a small lip at the top of the plastic barrel that should fit around the top of the hole.)

THE STRIKE PLATE. The easy part is attaching the strike plate. First, stick the metal strike plate to the magnet. Then shut the door against the plate. This creates a small "dimple" on the door stile, see Fig. 1b. This indicates where to drill the pilot hole. So when the plate is attached it will align perfectly with the magnet.

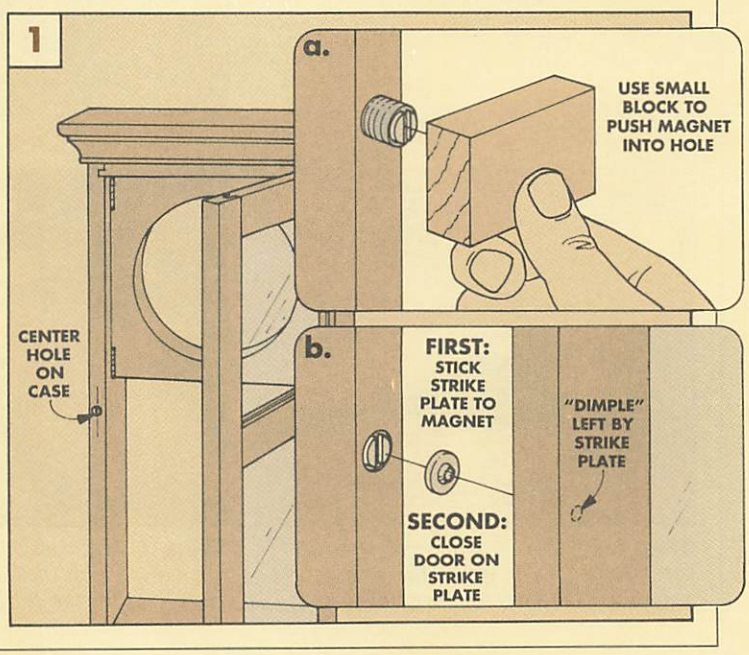

Child's Rocker

When building this rocking chair, I wanted to keep it simple — without sacrificing strength.

This Child's Rocker was designed so it would be easy to build. Instead of using flat stock or turning spindles on a lathe, I used common dowels for all the frame parts. So cutting the stock to size meant simply cutting the dowels to length. There was no ripping or planing needed.

Using dowels also made it easy to create strong joints. This rocker is held together with mortise and tenon joints. But they're not cut like typical mortise and tenons. The round tenons were shaped first on the router table. And the mortises were drilled on the drill press with the help of a shop-made jig. (All this is explained on pages 18 and 19.)

BUILDING SEQUENCE. There's another thing that simplified this rocker — the building sequence.

Usually, I'll work on one sub-assembly at a time. Making and adding each part individually until the sub-assembly is complete. Then I'll work on the next sub-assembly.

But this chair was different. Instead of building individual pieces for one section of the frame, I worked *all* the dowels at once. Cutting, routing, drilling, and assembling.

When I was done with the dowels, the frame of the rocker was complete. The only pieces left to complete the chair were the seat, arms, and rockers.

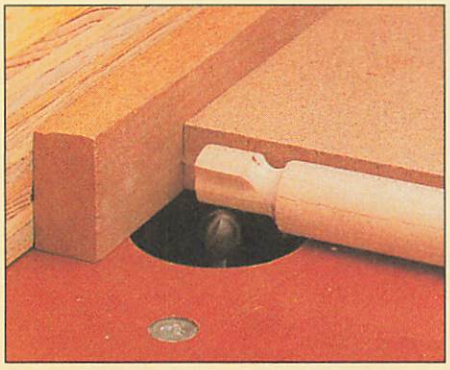

Step 1. *The frame of this rocker is built in three steps. First, using the router table, tenons are cut on the ends of the dowels.*

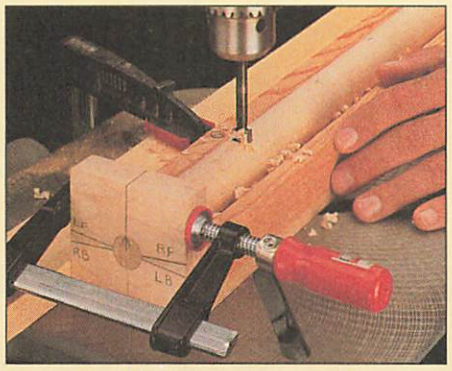

Step 2. *Matched mortises for the tenons are drilled next. To help with this, I built a simple jig for the drill press.*

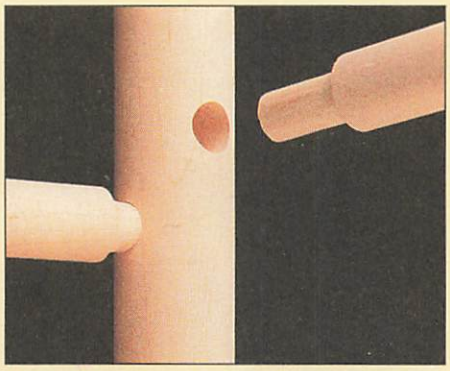

Step 3. *After the dowels are glued together, the frame is complete. Later, the seat, arms, and rockers are added.*

DOWELS

When working with dowels, you have to select them carefully. The dowels must be straight (especially for the back legs). And they must be truly round and consistent in diameter. If not, you'll have a hard time fitting tenons into their matching mortises.

DOWEL GAUGE. To avoid these problems, I use a gauge to help select the dowels. To make one, I drill holes in a block that match the size of the dowels needed. Then I take this block with me when buying dowels.

Note: I used maple dowels for the Child's Rocker, see page 31 for sources.

CUT DOWELS. With the dowels selected, you can start on the frame of the rocker. The first step is easy — cut all the dowels to length using the Dowel Diagram below.

Safety Note: Dowels tend to twist or roll when being cut. Be sure to clamp or hold your dowels securely while cutting.

DOWEL DIAGRAM

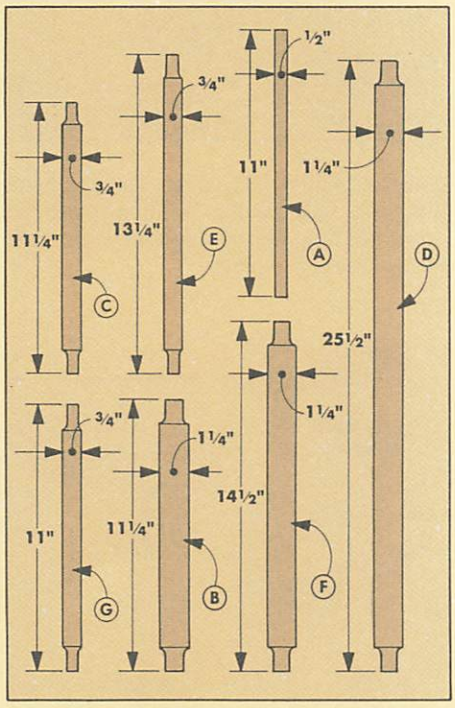

EXPLODED VIEW

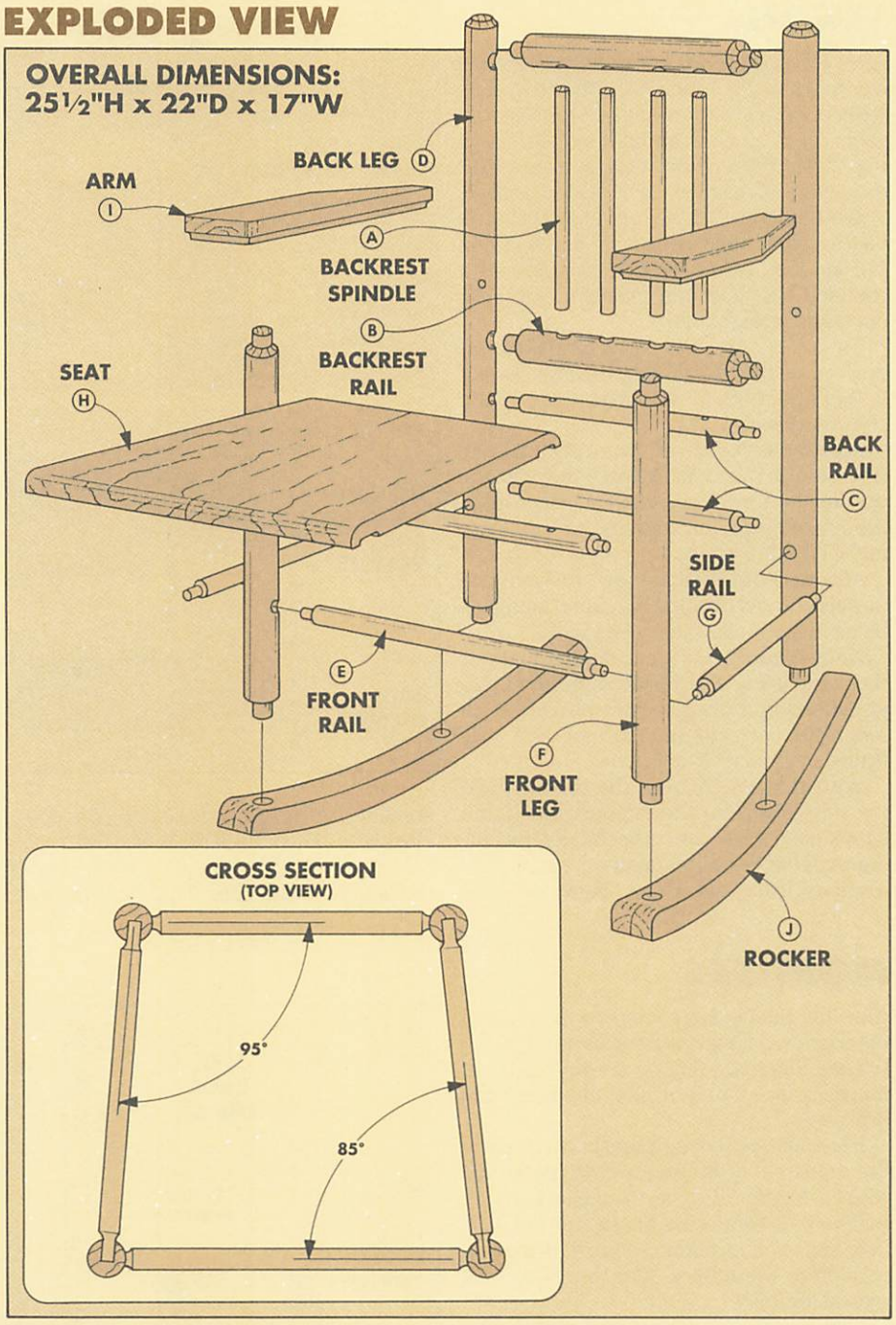

MATERIALS LIST

A	Backrest Spindles (4)*	1/2 x 11
B	Backrest Rails (2)*	1 1/4 x 11 1/4
C	Back Rails (2)*	3/4 x 11 1/4
D	Back Legs (2)*	1 1/4 x 25 1/2
E	Front Rails (2)*	3/4 x 13 1/4
F	Front Legs (2)*	1 1/4 x 14 1/2
G	Side Rails (2)*	3/4 x 11
H	Seat (1)	3/4 x 11 1/2 – 12
I	Arms (2)	3/4 x 3 1/2 – 13 rgh.
J	Rockers (2)	1 1/2 x 4 3/4 – 22

* Cut from Maple Dowels

CUTTING DIAGRAM

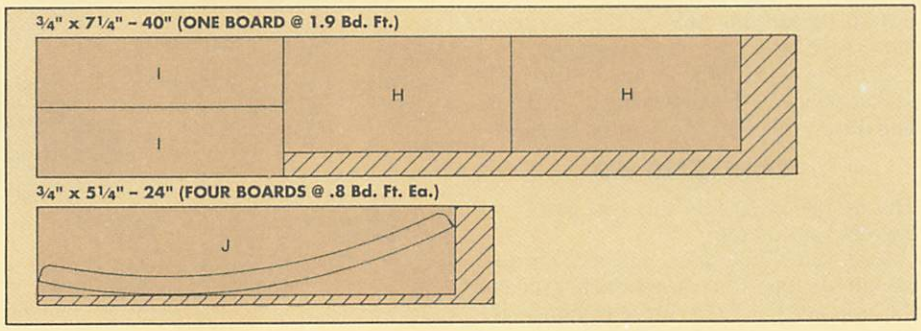

TENONS

After the dowels are cut to length, tenons can be routed on the ends. All the dowels (except the backrest spindles) start with the same *length* tenons on both ends, refer to Fig. 2. But the 1¼"-dia. dowels have larger *diameter* tenons than the ¾"-dia. dowels.

SET HEIGHT OF BIT. I routed each tenon on the router table using a ½"-dia. core box bit, see Fig. 1. (A core box bit produces a rounded shoulder and makes a smoother cut than a straight bit.)

To create a ¾"-dia. tenon on the *larger* dowels, set the bit ¼" high, see Figs. 1a and 2. (Set it ⅛" high for a ½"-dia. tenon on the *smaller* dowels.)

SET FENCE. Next, clamp an auxiliary fence to the router table fence to cover the opening for the bit, see Fig. 1. Then position the auxiliary fence 1" from the *outside* edge of the bit, see Fig. 1b.

ADD SUPPORT BLOCK. Now, to keep the dowel centered over the bit, clamp a support block to the router table, see Fig. 1a.

Note: Before routing any tenons, first test the setup using a scrap piece of dowel. Adjust the height of the router bit until each tenon fits perfectly in a ¾" (or ½") hole drilled in a piece of scrap wood.

ROUT TENONS. To rout the tenons, hold the dowel against the support block and slowly push it into the router bit. Keep pushing until the dowel bottoms out against the auxiliary fence, see Fig. 1. Now, form the shoulder of the tenon by rotating the dowel clockwise. Then, back the dowel out.

Next, remove the rest of the waste around the tenon in small bites. To do this, push the dowel in against the auxiliary fence and pull it straight out, see Fig. 3. Then rotate the dowel slightly. Repeat this procedure until each tenon is complete.

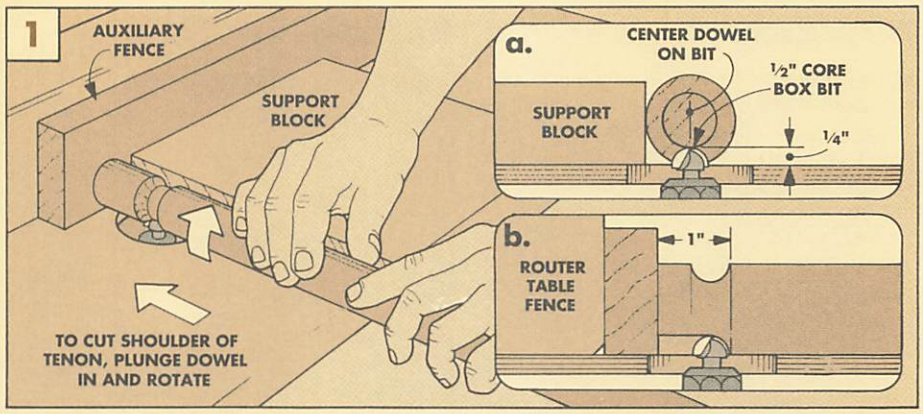

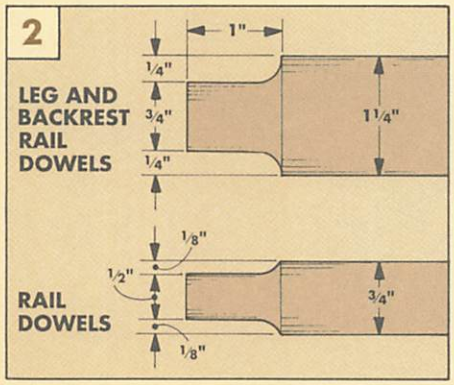

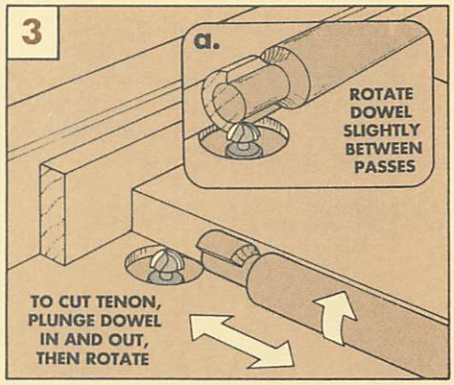

MORTISES

After the tenons are routed on the ends of the dowels, the mortises can be cut to fit the tenons. Since the tenons are round, these mortises are simply drilled out using the drill press.

It sounds easy enough, and in fact, most of the mortises in the legs are drilled in line with each other. But there's one on each leg that's not — the mortise for the side rail. This hole has to be positioned at an odd angle in relation to the others. And there's a good reason for this.

Like many chairs, the sides on this one aren't parallel, see Cross Section on page 17. The seat is wider at the front than at the back. (It makes the rocker easier to get in and out of.) This means the holes in the legs aren't 90° to each other, see photo next page.

If this sounds difficult, don't worry. To make it easier, I designed a jig to help position the dowels while drilling the mortises.

MORTISING JIG

The mortising jig has only two parts — a base and an end cap.

BASE. The 2x4 base has a V-shaped trough to support the dowel and help center the hole, see Fig. 5. To cut the trough, make

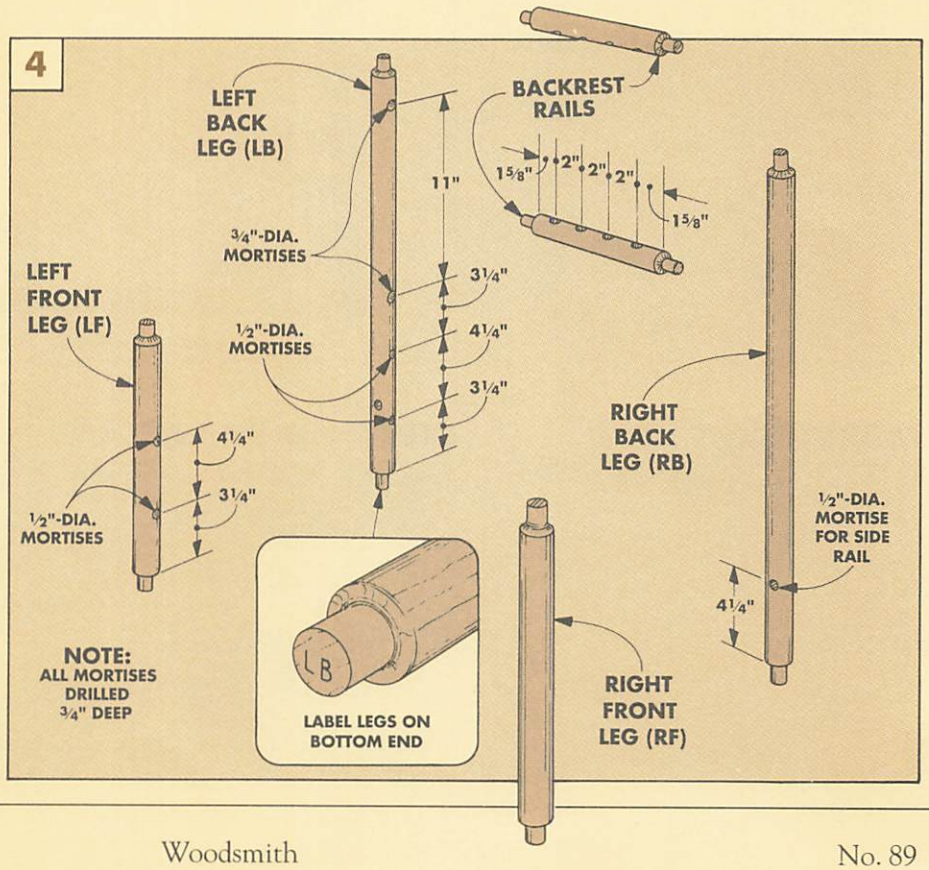

two passes, flipping the piece end-for-end between passes, see Fig. 5a.

END CAP. The ¾"-thick end cap is used as a guide for locating the holes. Draw a centerline on it from top to bottom, see Fig. 6. Next, lay out and label two more lines, see Fig. 6a. These lines will be used to position the legs so the holes will be drilled at the correct angle to each other.

Note: If you find this about as clear as a tax form, don't worry — it does work. And it should all make sense shortly.

Now to hold the leg tenon in the end cap, drill a ¾"-dia. hole near the center, see Fig. 6. After this hole is drilled, I cut a kerf down the centerline to the hole with a hand saw, see Fig. 7. (By pinching the kerf with a clamp, the tenon will be locked securely.)

Next, to hold the end cap to the base, drill a pair of screw holes in the cap, see Fig. 7. Then to position the cap on the base, insert a tenon in the end cap and set the leg on the base. Now, screw the end cap in place. (Note: The bottom edges of the cap and the base won't be flush — that's alright.)

DRILLING THE MORTISES

Now that the jig is built, the drilling can begin. But it's easy to make a mistake, so a little organization really helps.

MARK LEGS. To keep everything straight, first I oriented the four legs as they would be positioned when the chair was complete, refer to Fig. 4. Then I labeled the bottom end of each leg.

Now, on each leg, mark the locations of the mortises, refer to Fig. 4. Measure all the holes from the shoulder of the tenon, near the bottom end.

POSITION THE JIG. Next, the jig can be positioned on the drill press table. First, center the bit on the V-shaped trough. Then clamp a fence to the table and against the jig.

Shop Note: An easy way to center the fence is to chuck a bit in the drill press and lower it into the kerf on the end cap.

DRILL MORTISES. To drill the mortises, set one of the back legs in the jig. Then clamp the end cap to lock the tenon in position, see Fig. 8. Now you can drill the four mortises in a line. (Note: On each back leg there are two sizes of holes to be drilled. Two ¾"-dia. holes for the backrest rails. And two ½"-dia. holes for the back rails.)

MARK TENON. Before removing the dowel from the jig, draw an arrow on the tenon that points up to the kerf, see Fig. 9. (This will serve as a reference line when positioning the other hole — the one for the side rail.)

REPOSITION DOWEL. To drill the ½"-dia. hole for the side rail, first loosen the clamp and rotate the leg. The arrow should point to the line labeled the same as the leg you're working on, see Fig. 10.

Here's where the lines and labels on the end cap should start to make sense. They show just how far (and which direction) to rotate each leg. This way, the mortise for the side rail will be drilled at the proper angle in relation to the first holes you drilled.

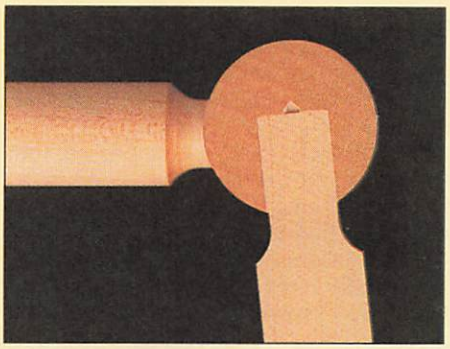

Locating the mortise for the side rail is a bit tricky. It's angled more than 90° in relation to the other holes in the leg.

DRILL MORTISE FOR SIDE. When the leg is positioned correctly, re-tighten the clamp. Lay out the location of the mortise for the side rail, refer to Fig. 4. Then drill the mortise to complete the leg, see Fig. 10.

REPEAT PROCEDURE. The same procedure can be repeated with each of the legs. Note: The front legs only have ½"-dia. mortises drilled in them.

BACKREST MORTISES. Finally, the mortising jig can be used again for drilling the mortises in the backrest rails (B). These each have four ½"-dia. mortises for the backrest spindles (A), refer to Fig. 4.

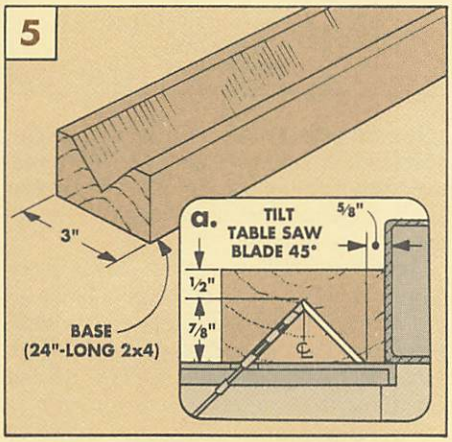

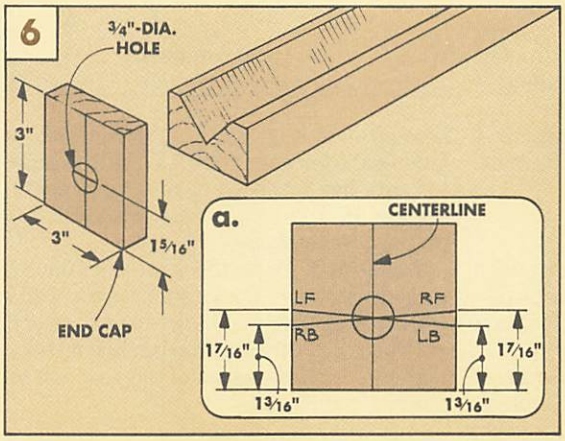

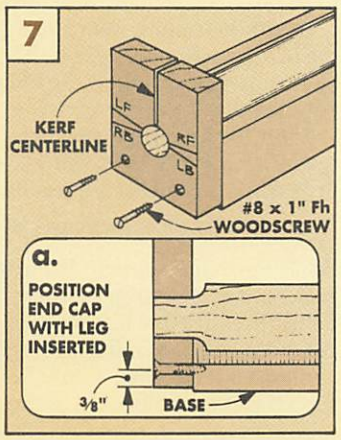

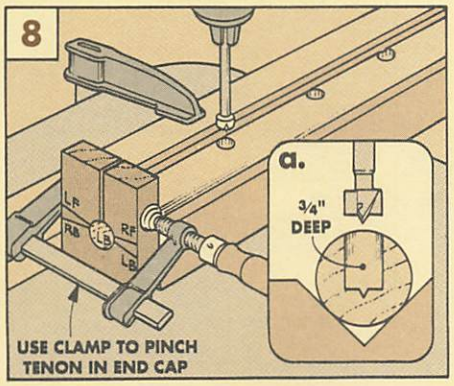

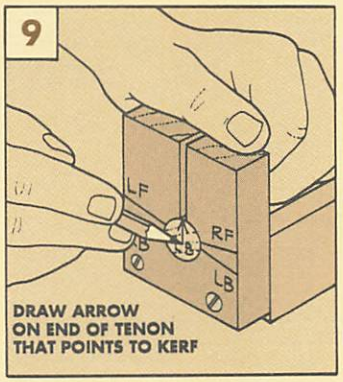

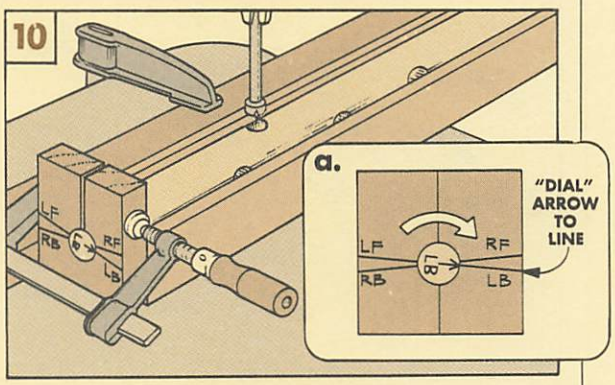

FRAME & SEAT ASSEMBLY

The rocker frame is about ready to be assembled. But before gluing anything together, there are a few more steps.

TRIM TENONS. First, the tenons on both the front and the back legs need to be trimmed 3/4" long, see Fig. 11. (They started out 1" long to fit in the mortising jig.)

The tenons on the tops of the back legs aren't really needed, but I thought a decorative shoulder would look nice. So I trimmed these tenons to 1/4", see Fig. 11.

PILOT HOLES. Also, you'll need to screw the seat down later. So drill shank holes in one front and back rail, see Fig. 12a.

FRAME ASSEMBLY

Now you're ready to glue up the frame. To do this, I glued the dowels into sub-assemblies. Then glued these assemblies together to complete the frame.

BACKREST. Begin with the backrest, sandwiching the **backrest spindles (A)** between the **backrest rails (B)**, see Fig. 12.

BACK LEG ASSEMBLY. To make the back leg assembly, glue the backrest assembly and the **back rails (C)** between the **back legs (D)**, see Fig. 12. (To attach the seat later, the back rail with the holes must be on top, and the holes must be vertical.)

FRONT LEG ASSEMBLY. Now, glue and clamp the two **front rails (E)** and the two **front legs (F)** together to make the front leg assembly. (Again, the rail with the holes must be on top with the holes facing up.)

FRAME ASSEMBLY. When the glue dries, the two leg assemblies can be joined to complete the frame. Just glue the **side rails (G)** between the assemblies, see Fig. 13.

Shop Tip: To position the legs correctly, I made a plywood base with 3/4"-dia. holes drilled in it to hold the leg tenons.

SEAT ASSEMBLY

While the frame is drying, begin work on the seat. Start by gluing up 3/4"-thick hard maple for the oversize seat blank, see Fig. 14. Then cut the **seat (H)** to finished length.

GROOVES FOR SEAT. Two 3/4"-dia. grooves routed across the bottom of the seat blank help position it on the rails. But instead of buying a larger core box bit, I used the same 1/2" core box bit (used to rout the tenons), see Fig. 15. To rout a 3/4"-wide groove, I simply made several passes.

TAPER SEAT. With the grooves routed, measure between the legs to find the width of the seat. (Allow 1/16" between the seat and each leg.) Since the front of the chair is wider than the back, the sides of the seat will be tapered, see Fig. 14.

ROUND OVER EDGES. After cutting the seat to width, flip it over and rout a 1/2" round-over on both ends, see Fig. 16a. Then soften all the edges of the seat, using a 1/8" round-over bit, see Fig. 16.

ATTACH SEAT. Now, set the seat in place and mark the location of the pilot holes on the *bottom*. (I marked them with a brad point bit.) Then after the holes are drilled, screw the seat to the rails, see Figs. 16 and 16a. (I had to use a stubby screwdriver.)

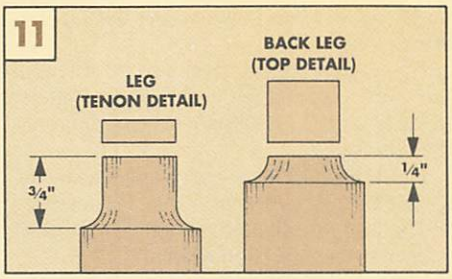

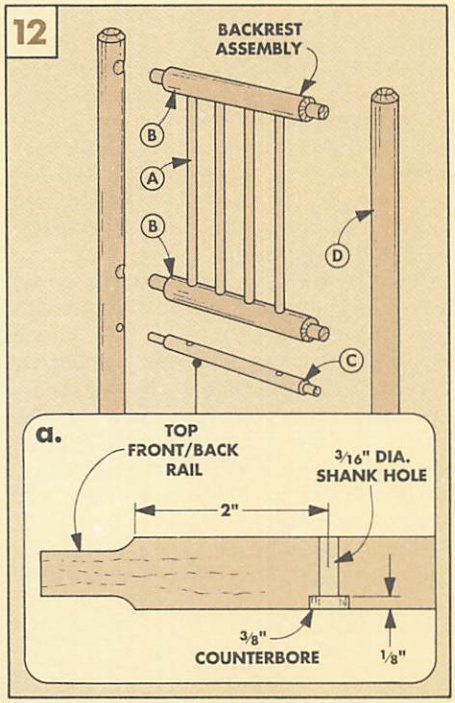

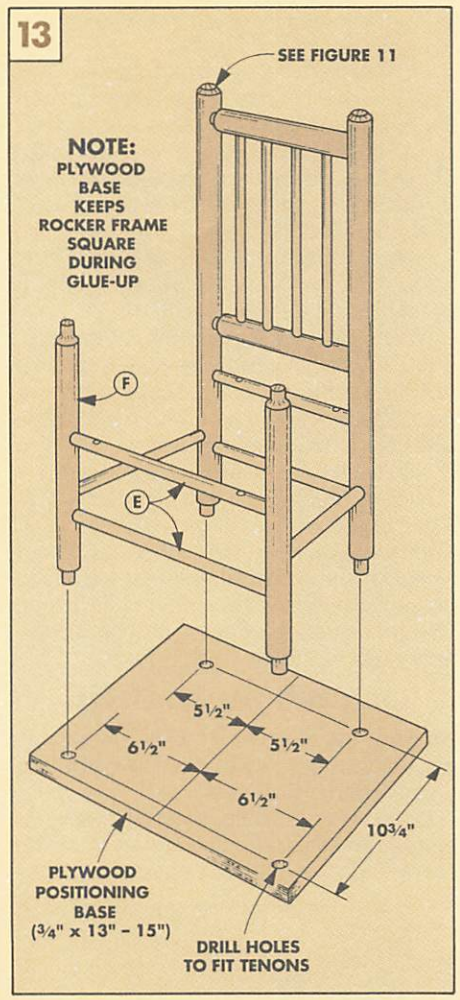

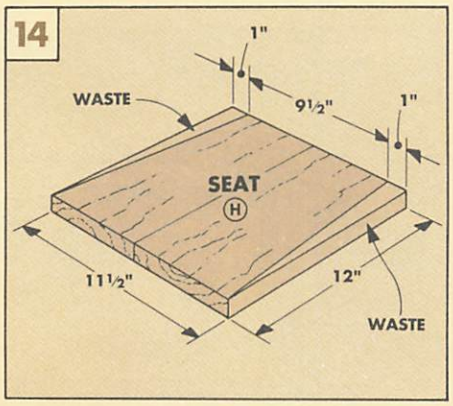

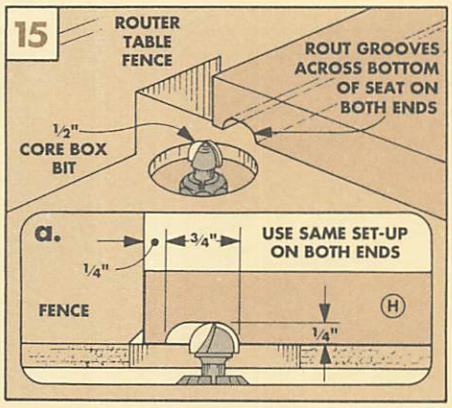

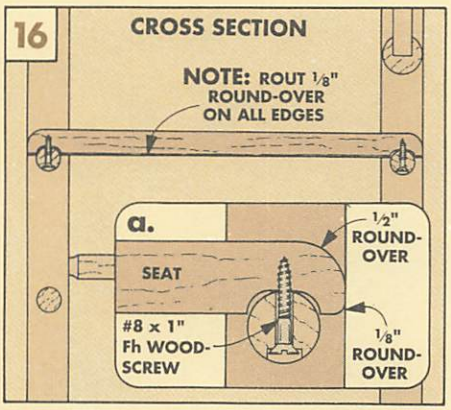

ARMS

After the seat has been screwed to the frame of the rocker, the arm rests are the next pieces to be added.

LAY OUT SHAPE. Each arm starts out as an oversize blank of ¾"-thick maple, see Fig. 17. The first step is to lay out the shape of the arm on the blank.

DRILL LEG RELIEF. The arm is screwed through the back leg. To get the arm to wrap around the leg with a tight fit, an arc must be cut out of the blank.

The best way to do this is to drill a 1¼"-dia. hole to match the diameter of the back legs, see Figs. 17 and 18. Note: If you don't have a drill bit this size, you could use a sabre saw with a very fine blade to cut the arc. Then sand the arc smooth.

Now, you can cut the **arms (I)** to finished size and shape, see Fig. 17. Then, remove the sharp edges by sanding a ⅜" radius on the corners. (Don't round the corners formed by the arc.)

DRILL MORTISE. The arm is glued on top of the tenon on the front leg. To do this, first you'll have to drill a ¾"-dia. mortise, ½" deep. Be sure to drill this mortise on the *bottom* side of the arm 1" from the inside edge, see Fig. 17.

SHAPE EDGES. There are a couple more steps before the arms can be attached. Since this rocker is for children, I wanted to remove all the sharp edges.

So I began by routing the bottom edges of the arms using a ¼"-radius cove bit, see Fig. 19a. (Don't rout the arcs where the arms are connected to the back leg.)

Shop Note: If you don't have a cove bit, a ½"-dia. core box bit will also work. But you'll have to bury the bit in the router table fence. Also, to complete the cove, you'll need to file and sand the corners by hand.

Next, I routed a ⅛" round-over on the top edges of the arms, see Fig. 19b. (Again, don't rout the arcs where the arms are connected to the back leg.)

ATTACH ARM. To attach each arm, position the arm on the front leg. Then cut a spacer to fit between the arm and the seat, see Fig. 20. This spacer will hold the arm at the proper position on the back leg. This way, you can mark the position of the counterbored pilot hole that is drilled through the back legs, see Fig. 20a.

After drilling the pilot holes, glue the arm to the front leg. Then screw and glue the arm to the back leg, see Fig. 21. Use a ⅜"-dia. plug to fill the hole in the back leg.

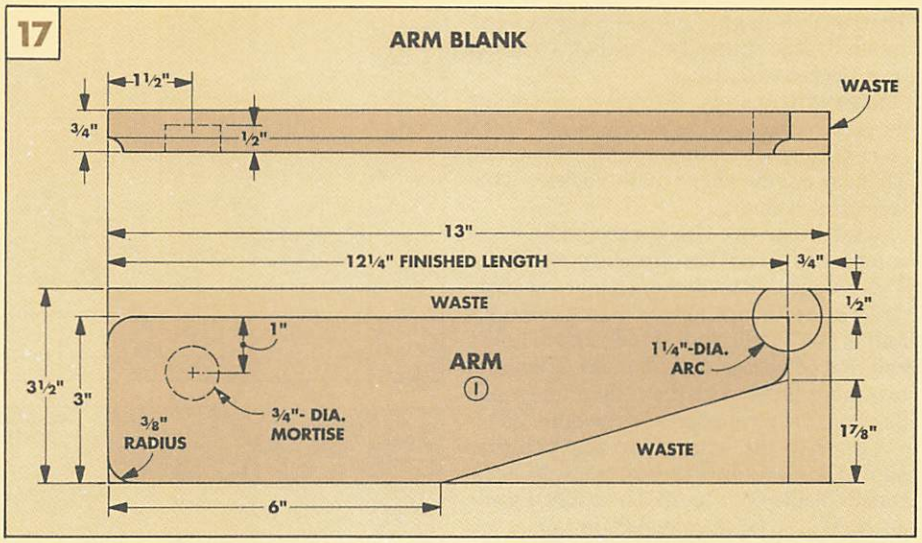

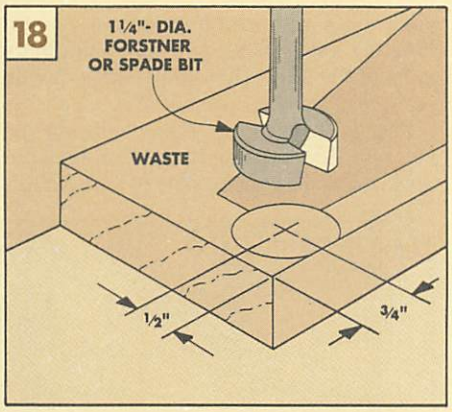

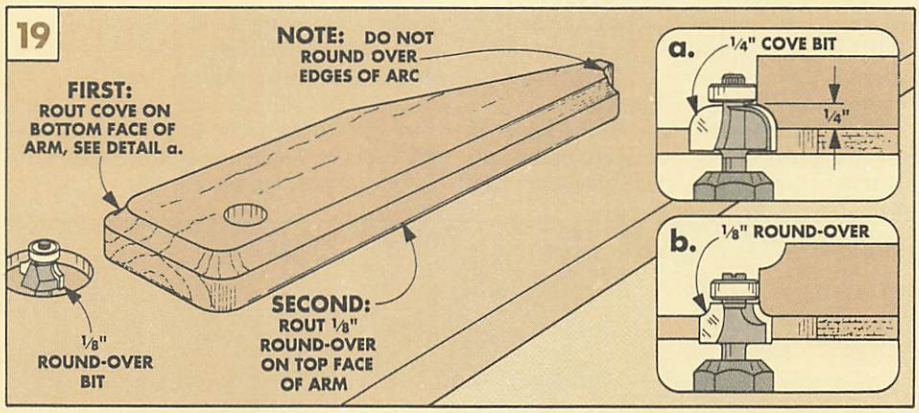

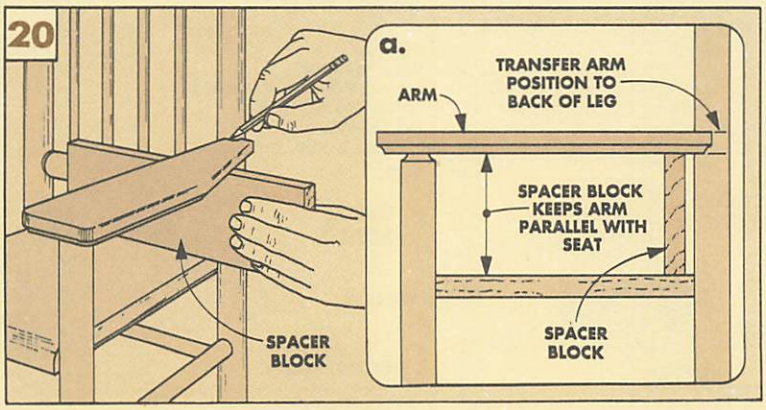

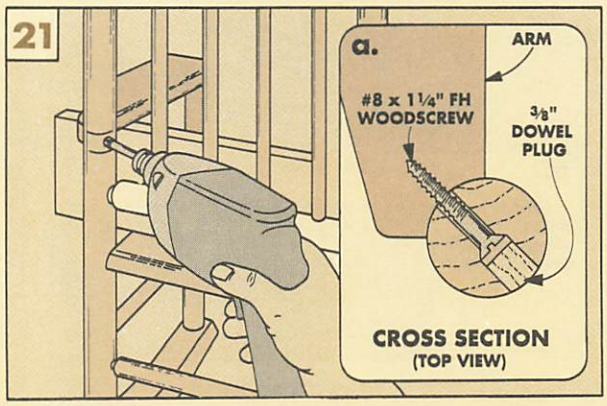

ROCKERS

The rockers might look like they've been steam bent to shape. But really, they're cut from oversize blanks.

LAMINATE BLANKS. To make the blanks for each rocker, start by gluing two ¾"-thick pieces of maple together, see Figs. 22 and 23. Then lay out the shape of the rocker on the face of each blank.

MAKE COMPASS. I used a shop-built beam compass to lay out the shape of the rockers. This compass is made from a piece of scrap that's a few inches longer than the largest radius (33"). Drill a hole at one end to hold a nail that will act as a pivot point. Then drill two more holes near the other end — one 32" from the pivot point and the other 33".

To strike the correct arc, the compass should be elevated to the same height as the rocker blank, see Fig. 23. To do this, I made a simple base for the compass by taping two boards together with double-sided tape.

To get the arcs in the correct position on the rocker blanks, the beam compass must be nailed to the base exactly 6¾" from the end, see Fig. 23.

LAY OUT ROCKER ARCS. To lay out the arcs for the rockers, begin by clamping the base of the compass so it's flush with the edge of your workbench, see Fig. 23. Then do the same for the rocker blank. (The hole for the 33"-radius should just touch the bottom edge of the rocker blank 6¾" in from the end.) Finally, draw both arcs on each blank.

DRILL MORTISES. Before cutting out the rockers, I drilled the mortises for the legs. But I couldn't drill through 4" of wood to make a ¾"-deep mortise. So, I cut a notch out of the rocker blank, see Fig. 24.

To drill the mortises, stand the blank on the drill press and set the depth of the hole 1" above the *bottom* of the blank, see Fig. 24a. Then drill the mortises to match the diameter of the leg tenons — ¾".

CUT OUT ROCKERS. Next, I cut out the **rockers (J)** on my band saw, cutting a little wide of the layout lines. Then I mounted a drum sander in my drill press and sanded up to the lines. (Check both rockers to make sure they're the same shape.) To complete the rockers, I softened all the edges with a ⅛" round-over bit, see Fig. 25.

ATTACH ROCKERS. Finally, to attach the rockers, drill shank holes in from the top — through the mortises, see Fig. 26a. Then come back from the bottom and counterbore the holes. Next, drill pilot holes in the ends of the legs. Then glue and screw the rockers to the legs, see Fig. 26a.

FINISH. To give the rocker a durable finish, I wiped on a coat of General Finishes' Sealacell and a couple coats of Arm-R-Seal.

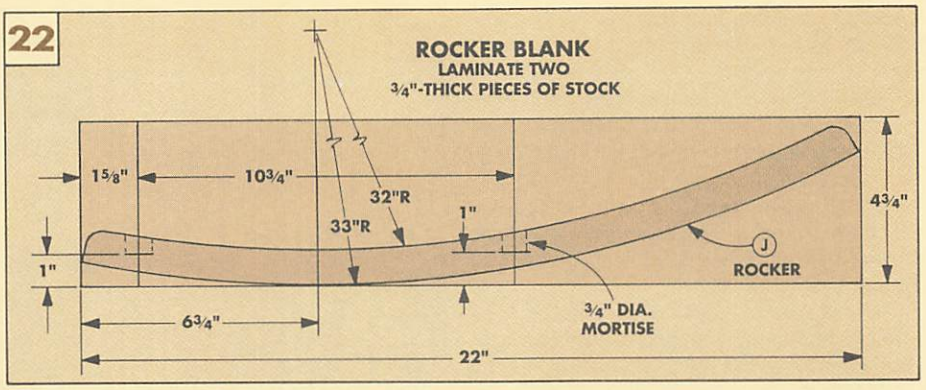

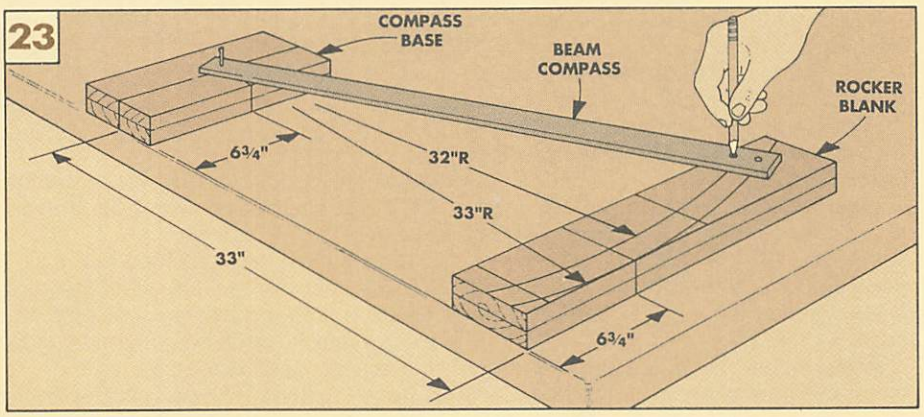

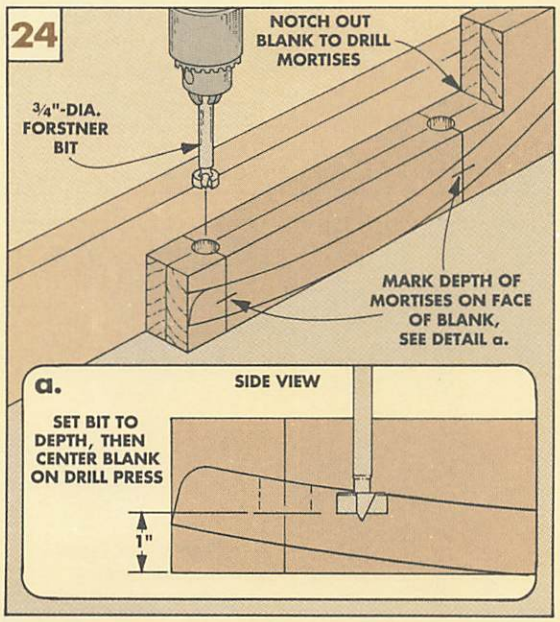

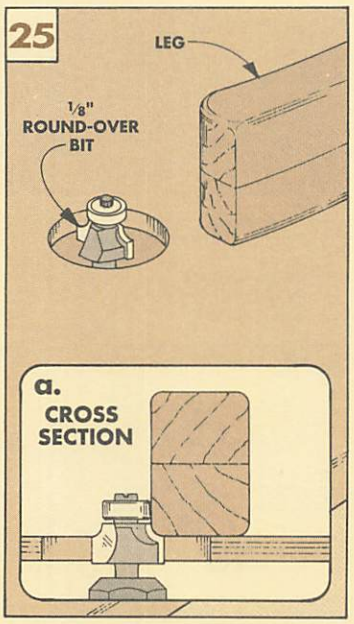

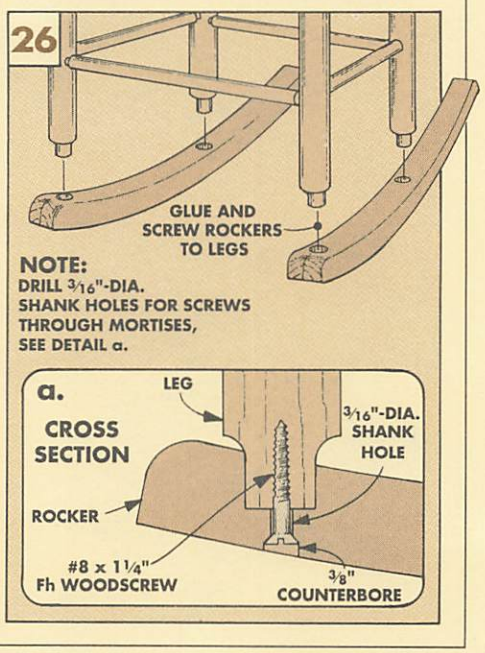

Favorite Accessories

A good accessory isn't a gimmick. It should make a tool more versatile, more accurate, or safer. Here are ten we use most.

Some people think I spend too much time making jigs. It's just that I don't think twice about stopping in the middle of a project to build a separate "helper." But many shop-made jigs have just one purpose — to help in making a particular part for a particular project.

A store-bought accessory is different — it's not usually designed for one project, but for one *tool*. Okay, why not build your own accessories like you do with jigs? Good point.

A manufactured accessory will usually cost more than an equivalent shop-made jig. But cost shouldn't be the biggest consideration. There's also the question of accuracy.

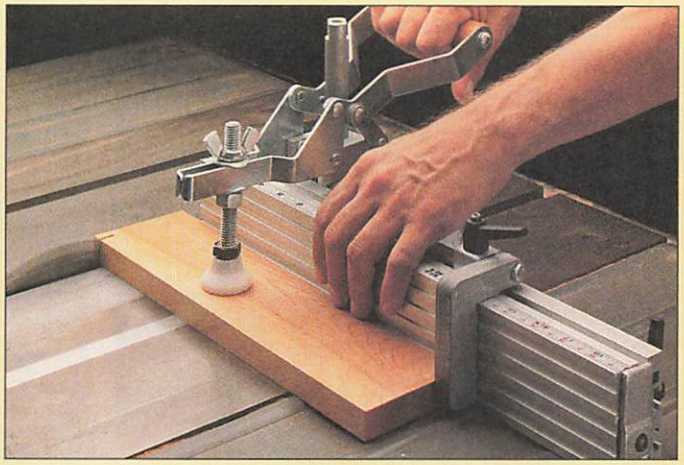

MORE ACCURATE. Even the best tools sometimes need help. Take the table saw, for instance. It comes with a miter gauge, but when used for finish crosscuts, the standard gauge can come up short. (The protractor head is too short to act as a fence, and the markings and stops aren't very accurate.)

That's why I equipped my table saw with an Accu-Miter and optional hold-down, see photo. They're examples of accessories that improve the accuracy *and* safety of a saw.

EASIER. Tool accessories can also make a job easier. Dovetails are a good example. On a small project, I'll usually cut dovetail joints by hand. But on a larger project (like a chest of drawers) it makes more sense to use a dovetail jig, see page 25.

MORE VERSATILE. Some accessories make a tool more versatile. For instance, a sanding drum can turn a drill press into a sanding machine, see page 24.

Whatever the advantage, I try to find accessories that are well made. Extruded aluminum, heavy steel, and precisely machined parts are usually signs that an accessory will hold up well in the shop. (For sources of these accessories, see page 31.)

TABLE SAW ACCESSORIES

Almost every time I use the table saw, there's an accessory helping out. For accurate and safe ripping, I use an adjustable featherboard. And for crosscuts and miters, it's usually the Accu-Miter miter gauge.

ACCU-MITER

A lot of money, well spent. That's the way I feel about the Accu-Miter. It's a replacement for the standard miter gauge that comes with a table saw. But for $150, I expect more than a miter gauge replacement — I expect improvements. And there are. (There are also add-on accessories, see page 31.)

The first improvement is the way it's made. Heavy cast aluminum miter head, and precision extruded fences. It's built like an aluminum tank. Machined into the miter head are pre-set stops for four common miter angles, left and right. And they're accurate — once the gauge is adjusted to 90°, the angles don't need to be checked.

One of the things I like most about the Accu-Miter is its long fence with adjustable stops. I use these stops every time I'm building a project with a lot of parts that are all the same length. Across the top of the fence is a tape measure (see photo) which makes set-up for an exact-length crosscut fast and easy.

ADJUSTABLE FEATHERBOARD

Many projects, such as the Jewelry Chest on page 8, call for small, thin strips of wood. And a lot of parts that are the same size. But when ripping or resawing identical parts, there's always a question of accuracy (and safety). The workpiece shouldn't pull away from the rip fence or lift up from the table.

So why a store-bought featherboard? (I've made my own in the past.) A couple things make this one better. First, the large wing nut on top lets you quickly lock the board in any position on the table. And an adjustable aluminum "thumb" on top can be used to hold a workpiece down on the saw table.

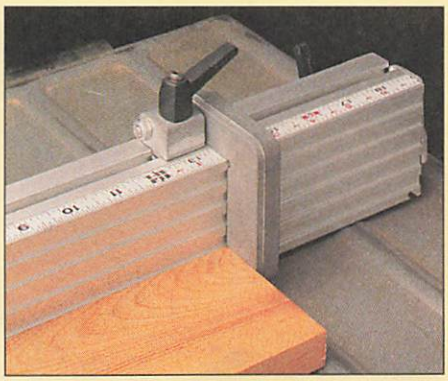

The Accu-Miter has a built-in tape for quick set-ups. And a sliding stop for cutting multiple pieces the exact same length.

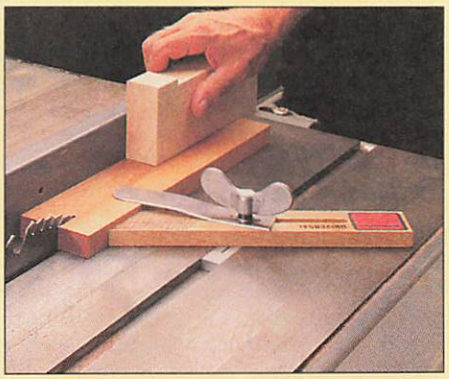

A big wing nut locks the featherboard in place for safer resawing and rip cuts. An aluminum "thumb" can act as a hold-down.

DRILL PRESS ACCESSORIES

The simplest tools are often the most versatile. Like the drill press — it's not just for drilling holes. Some accessories allow the tool to be used for other tasks. Or they make drilling multiple holes easier.

KEYLESS CHUCK

Changing from one bit to another can be a pain. Especially when drilling a lot of different-size holes. And it has always been done with a key in the chuck. That is, until Grizzly Imports found a manufacturer of a ½" keyless chuck for the drill press. (For more information, see page 31.)

A keyless chuck for the drill press does the same thing as a keyless chuck for the portable drill — it makes the tool more efficient. Just twist the cylinder toward the bottom of the chuck to insert (or remove) a drill bit, see photo. The chuck can be quickly tightened the same way, without a key.

Note: To install a keyless chuck on your drill press, the drill chuck arbor (shaft) first needs to be changed. For the proper size replacement arbor, check with the manufacturer of your drill press.

SANDING DRUMS

The drill press also comes in handy for sanding. Curved edges, circular cutouts, and large holes, for instance. Or for thickness sanding small stock, see right photo below.

That was the challenge I faced when working on the back slats for the Oak Rocking Chair in *Woodsmith* No. 84. The slats were thin strips of oak bandsawn to a curved shape. And to fit in ¼"-wide mortises, all the slats had to be the same thickness.

The solution was to use a sanding drum wider than the back slats. Then the slats could be fed between the sanding drum and a pivot block clamped to the drill press table. After several passes, the slats were all smooth and all the same thickness.

Sanding drums are available individually, or in sets of different-size drums (lengths and diameters), see photo above. Two-inch-long drums are useful for most sanding tasks. (For sources, see page 31.)

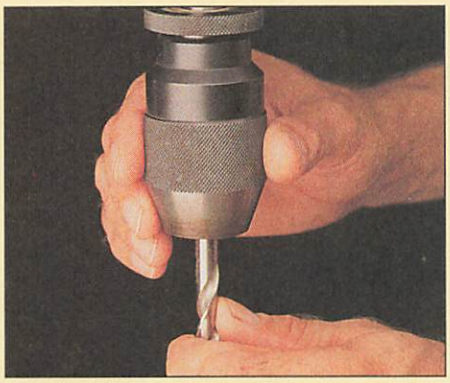

A twist of the wrist is all that's needed to change bits with a keyless chuck in the drill press. And hand-tightened bits don't slip.

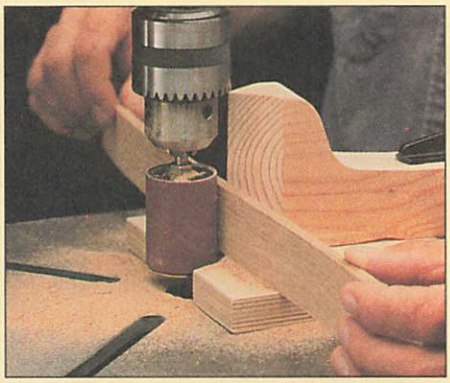

Sanding drums make the drill press more useful. Sanding can be done freehand, or with an extra setup for easy thicknessing.

BAND SAW ACCESSORIES

A band saw doesn't usually come with any accessories. And if you think about it, it makes sense — for most operations a band saw can do a good job all by itself. But for some things, there are a couple accessories that help the band saw produce better cuts.

CIRCLE-CUTTING JIG

When the band saw is tuned up and the blade is sharp, it's not too difficult to make a curved cut. But cutting a perfect circle is different. For a wheel or a disk (such as the backing plate for the dial of the Pendulum Clock on page 26), I use a Uniquest circle-cutting jig, see photo at right.

A couple things make this circle-cutting jig better than its shop-made equivalent (basically a piece of plywood with a nail for a pivot pin). First, this jig is well made — a steel guide bar, an aluminum pin block, and an aluminum pivot pin. These features mean the jig should stay useful for a long time.

This jig works differently than most shop-made jigs I've seen. First, you remove the guide blocks from each side of the saw blade. Then, the guide bar is installed in place of the guide blocks. A notch in the guide bar surrounds the saw blade and keeps it from flexing.

This setup means the pivot pin that slides along the guide bar is directly connected to the saw. Not a clamped-on attachment. So the pivot pin is always in alignment with the blade, and there are fewer adjustments to make when setting up to cut a circle.

TASK LAMP

Maybe I'm just getting old, but when using the band saw I like to have as much light as possible on the workpiece. It doesn't matter if I'm cutting a circle or a curve, I usually follow a fine pencil line on the workpiece. But the line can get a little fuzzy with just the overhead shop lights. A task lamp attached directly to the saw helps a lot, see photo.

Some manufacturers offer a lamp with a bracket that bolts to their band saws. The task lamp shown here uses a magnet in the base. And it's strong enough to hold the lamp securely when the arm is adjusted.

Probably the best thing about a task lamp with a magnetic base is portability — it can be used anywhere in the shop where there's a metal surface and some extra light needed.

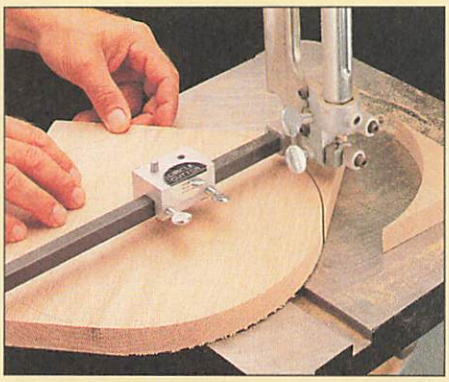

This all-metal circle-cutting jig installs quickly and guides a workpiece accurately. It's adjustable for different-size circles.

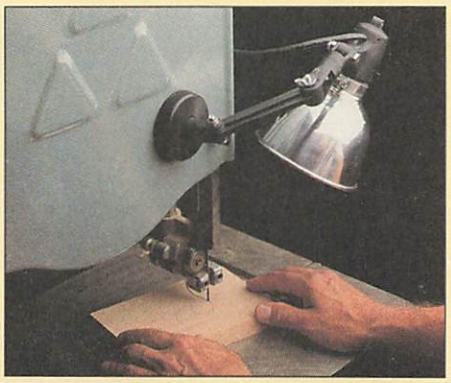

A focused light reduces eye strain and permits more accurate cuts. A magnetic base secures the lamp to any metal surface.

ROUTER ACCESSORIES

In the *Woodsmith* shop, the router is the tool we use most. That's probably because it's so versatile. Rabbets, dadoes, dovetail joints, and decorative edges. It does just about everything but stir my morning coffee.

As versatile as it is, there are several accessories that make the router even better. Some for joinery, some for decorative work, and some to make the router do "non-router" tasks. Here are the three router accessories used most often on *Woodsmith* projects.

DOVETAIL JIG

It's hard to beat the feeling that comes from cutting dovetails by hand. Pure pleasure. But when I'm working on a project with dozens of dovetails — say a chest of drawers — it's a whole lot faster (and easier) to use a router and a dovetail jig.

All dovetail jigs have one thing in common — a system of holding the workpieces while the router cuts the pins and tails. But if the workpieces slip while the joints are being cut, they'll be ruined. And there goes "faster and easier" dovetails.

That's why, several years ago, I decided to build a dovetail jig with an improved clamping system, see photos above and below. First, I wanted pressure bars strong enough so they wouldn't bend as the workpieces are clamped down. So I used thick maple.

Also, my jig has four locking cams. On most dovetail jigs, the pressure bars are tightened by wing nuts or another device. But these cams apply more pressure than a wing nut. And they tighten down quicker.

Besides being strong, the best thing about this jig is that it can be made in the shop, with some hardware-store parts and about five board feet of hardwood. (For more information, see *Woodsmith* No. 58.)

Even the template ("comb") that guides the router can be made from a piece of Masonite. But I found that a more accurate and durable jig could be built with a plastic template. (We offer a kit that includes all the hardware and a plastic template, see page 31.)

GUIDE BUSHINGS

The secret to routing perfect dovetails is an accurate template in the jig and a guide bushing in the router. A guide bushing fits in the opening of the router base plate and guides the router bit around the fingers of the template, see photo below. But guide bushings aren't just for routing dovetails.

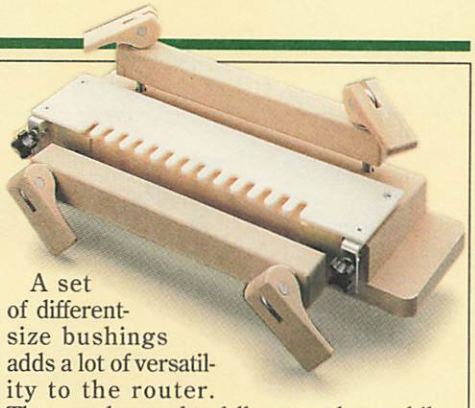

A set of different-size bushings adds a lot of versatility to the router. They can be used to follow templates while routing patterns for many different projects. They're a low-cost, useful router accessory.

Most router manufacturers offer guide bushings to fit their routers. A universal base plate with guide bushings is also available, see Sources on page 31.

TOOL GUIDE

A guide bushing guides a router from the center of the base plate. But sometimes I need *external* guidance. Any straight edge will work. But an aluminum Clamp 'N Tool Guide is a more accurate accessory.

On a wide workpiece, the guide clamps in place quickly and squares itself automatically. It's especially useful for routing a series of dadoes or dovetail grooves, photo below.

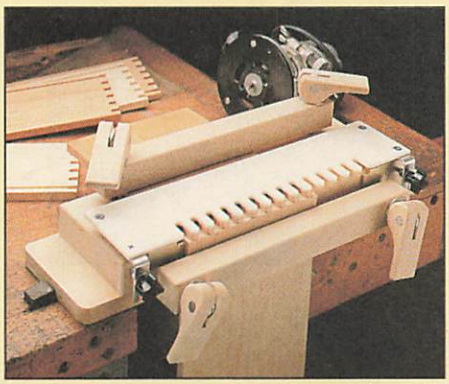

Perfect-fitting dovetail joints require a jig with a strong clamping system. Cam clamps close quickly, thick bars don't bend.

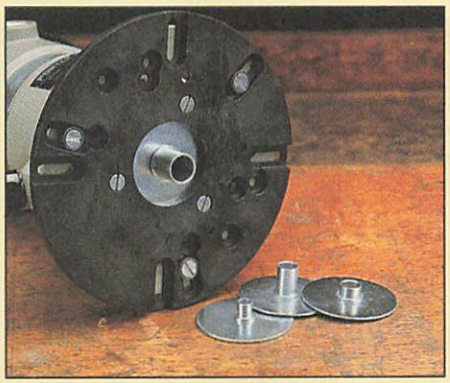

Guide bushings are useful router accessories for following templates. Different-size bushings fit around different-size bits.

A router can be used to cut accurate dadoes, sliding dovetail grooves, and other joints. A straight-edge clamp helps a lot.

QUICK-CHANGE DRILL BITS

There must be four or five electric drills in the *Woodsmith* shop. But they're not all equipped with keyless chucks. Recently, I've been using different accessories that work even better. They're called quick-change drill bits and they can be used without replacing the drill chuck, see photo.

The key to this system is a chuck adaptor. (Insty-Bit is the name of one quick-change chuck adaptor and bit system.)

The chuck adaptor is tightened in the drill chuck exactly as you would a drill bit. Then a sliding ring on the adaptor locks and unlocks the bits — just like the quick-release lock on an air hose.

If there's one drawback to the quick-change bit system, it's that regular drill bits won't work. Only hex shank bits work. But a drill bit with a hex (six-sided) shank has an advantage — it can't slip while drilling.

There are several kinds of hex shank bits available. Twist bits, brad points, countersinks, driver bits and others. They're available from a number of manufacturers, and they cost about the same as regular drill bits. (See Mail Order Sources on page 31.)

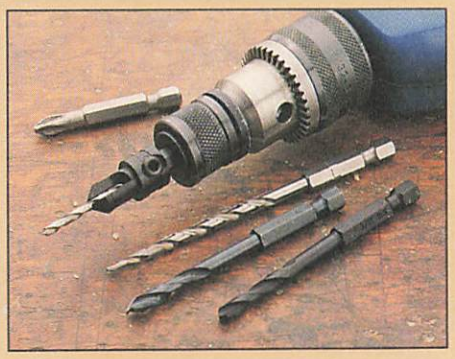

Pendulum Clock

There are a couple things to consider when designing a pendulum clock. First, there needs to be enough room inside the case for the clockworks and the swinging pendulum. And second, enough space *behind* the works to reach inside for adjusting the clock or replacing the battery. Without taking off the back.

TWO DOORS. The solution to both these problems was a door behind a door, see the inset photo at right. The outer door encloses the case. And the inner door supports the clock parts. So there's room for all the parts, and a way to get at them, too.

CLOCKWORKS. Speaking of the clock parts. The clock movement I selected is battery-operated with a bim-bam chime. After selecting the movement and dial, the case was designed to fit around them. (See Sources on page 31 for a complete hardware kit for this Pendulum Clock.)

But if you prefer another movement for a different sound, or maybe a different dial, hold off building the case until you have the parts in hand. That's because different parts might require a different-size case.

MATERIALS

CASE		
A	Sides (2)	3/4 x 4 - 24
B	Top/Bottom (2)	3/4 x 4 - 10 1/4
C	Back (1)	1/4 ply -10 1/4 x 23 1/4
MOLDING		
D	Transitions (2)	1/4 x 4 15/16 - 11 1/4
E	Upper Cove (1)	3/4 x 5 5/16 - 12
F	Upper R.O. (1)	3/4 x 5 13/16 - 13
G	Lower Cove (1)	3/4 x 4 13/16 - 11
H	Lower R.O. (1)	3/4 x 4 1/16 - 9 1/2
INNER DOOR		
I	Door Panel (1)	3/4 x 9 3/8 - 9 1/2
J	Dial Panel (1)	1/4 ply - 8" dia.
OUTER DOOR		
K	Stiles (2)	3/4 x 1 3/4 - 23 7/8
L	Top & Mid. Rails (2)	3/4 x 1 3/4 - 9 1/2
M	Bottom Rail (1)	3/4 x 2 1/2 - 9 1/2
N	Glass Stops	1/4 x 1/4 - 70 rgh.

SUPPLIES

- (2) Brass butt hinges (1 1/2" x 1 1/4") with screws
- (2) Brass ball-tipped hinges (1 1/2" x 1 1/4") with screws
- (1) Magnetic catch (surface mounted) with catch plate
- (2) Hanger plates with screws
- (1) Magnetic door catch (5/16"-dia.) with strike plate
- (1) Brass door knob (3/4" x 3/4") with screw
- (1) 1/8"-thick window glass – 10" x 24" (rgh)
- (1) Clock face (8"-dia.) with hands
- (4) Plastic retaining clips with screws
- (1) Quartz clock movement with pendulum and mounting screws
- (40) 1/2" Wire brads

CUTTING DIAGRAM

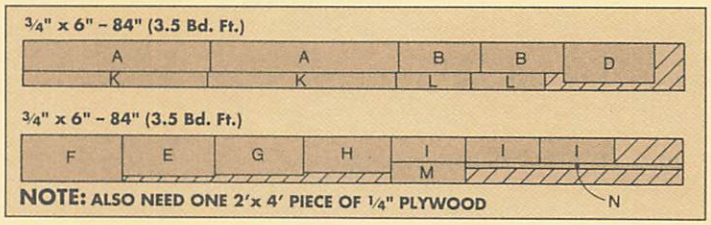

EXPLODED VIEW

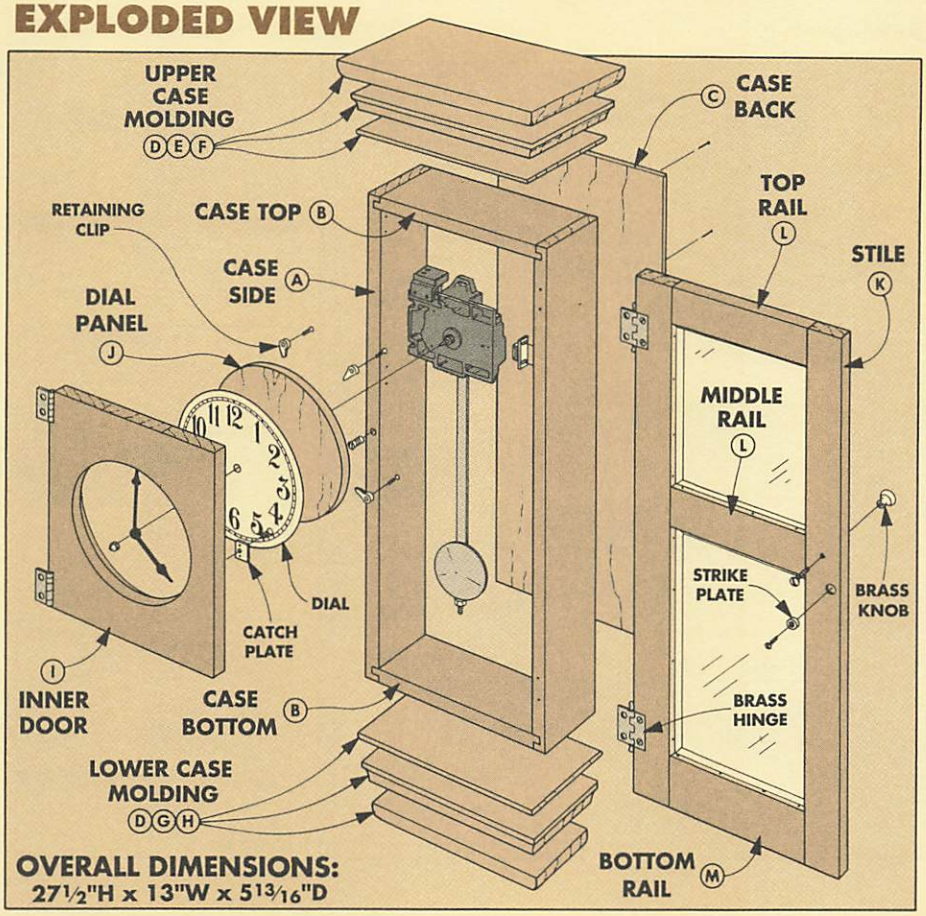

OVERALL DIMENSIONS:
27½"H x 13"W x 5¹³⁄₁₆"D

CROSS SECTION

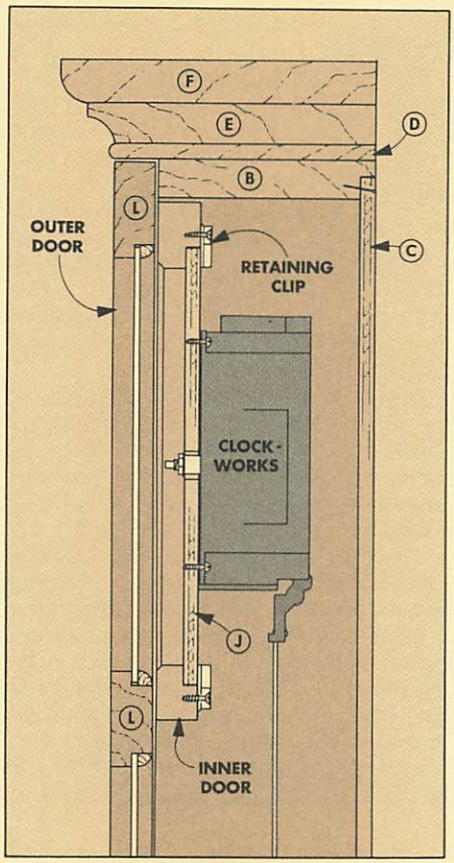

CASE

The case of the Pendulum Clock is just a tall box with a back. Molding is added later to make the box look more like a clock case.

BOX PIECES. I started the case by cutting the case **sides (A)**, **top**, and **bottom (B)** to finished length, see Fig. 1. Then, I ripped all four pieces to the same finished width (4").

JOINTS. Before the case can be assembled, joints are cut on the ends of each piece, see Fig. 2. I decided to use rabbet and dado joints — they're simple to make, yet surprisingly strong.

Joinery Note: A rabbet and dado joint could also be called a *tongue* and dado joint. That's because the rabbets actually form short tongues on the ends of the top and bottom (B) pieces. It's these tongues that support the weight of the case.

After cutting the joints on the case pieces, the box can be glued, squared, and clamped.

BACK RABBET. Next, I used the router table to cut a rabbet around the inside back edges of the case to accept the ¼"-thick plywood back, see Figs. 3 and 3a. Then square up the corners with a chisel.

BACK PANEL. Finally, cut a plywood **back (C)** to fit in the rabbet, see Fig. 1. But don't install the back just yet — it's easier to finish the clock and install the clockworks if the back of the case is left open.

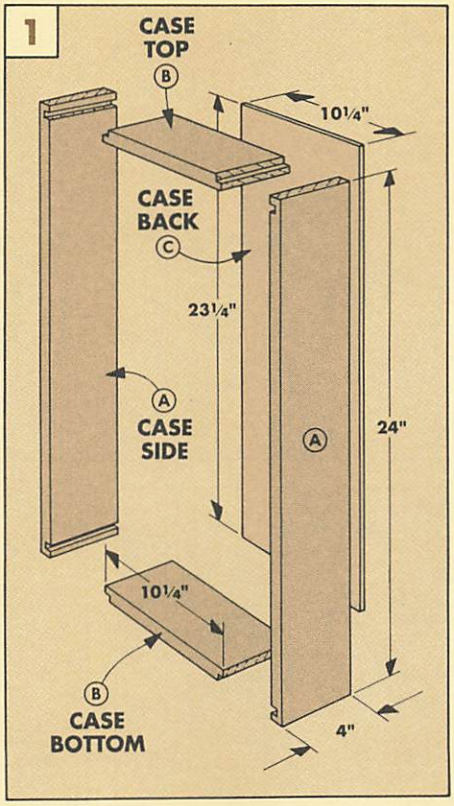

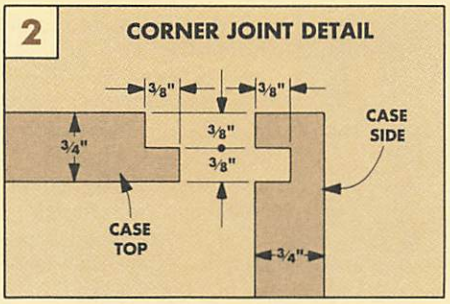

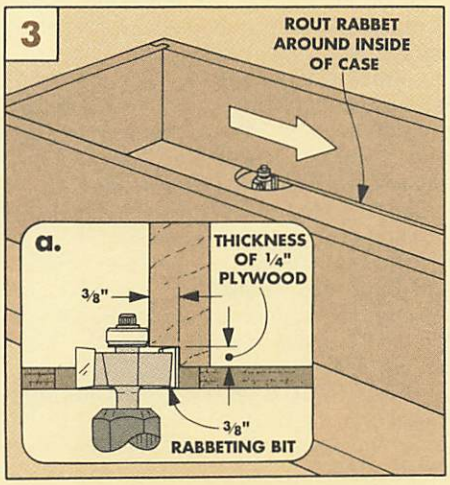

UPPER & LOWER MOLDING

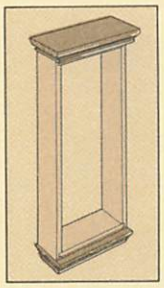

Adding decorative molding turns the plain box into a finished case. It's built-up from pieces of wood with profiles routed on the edges.

MOLDING. I started with two ¼"-thick pieces of **transition molding (D)**, see Fig. 4. First, cut these pieces to length so they extend ⅛" beyond the sides of the case. Then rip them to width so they're flush at the back of the case and extend 15/16" beyond the front of the case.

Design Note: The dimensions given for the molding assume the case is 4" deep.

Now, cut the remaining molding pieces for the upper molding assembly — the **upper cove molding (E)** and the **upper round-over molding (F)**, see Fig. 4.

Then cut the remaining pieces for the lower assembly — the **lower cove molding (G)** and **lower round-over molding (H)**.

ROUT PROFILES. Now, decorative profiles can be routed on three edges of each molding piece, see Figs. 5, 6, and 7. Note: The back edges of the molding pieces should *not* be routed, see Cross Section on page 27.

ATTACH MOLDING. Now the molding can be attached to the case. See page 15 for this.

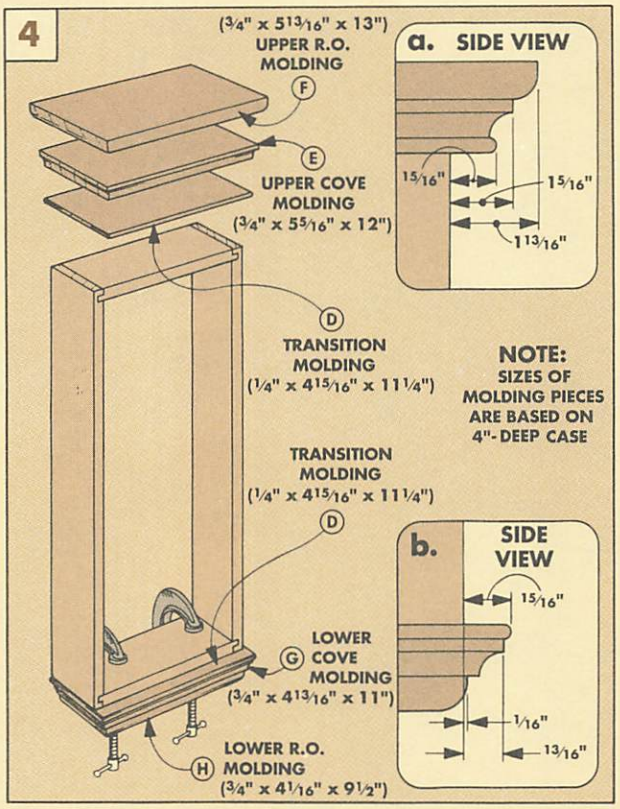

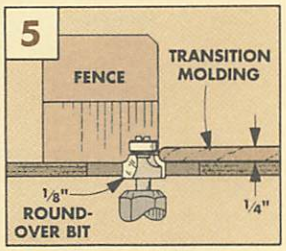

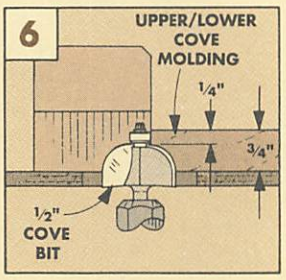

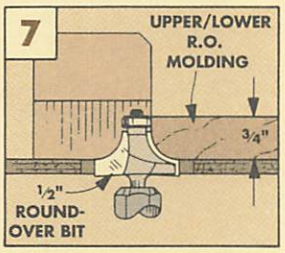

INNER DOOR

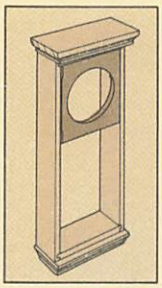

After the molding was attached to the case, I began work on the inner door.

INNER DOOR. First edge-glue three pieces of ¾" stock for the **inner door panel (I)**, see Fig. 8. (It's hard to find a single piece of stock that's wide enough.)

Then cut the panel to finished size. Note: Allow for a 1/16" gap on the sides and top, see Fig. 11.

Next, cut a 7⅜"-dia. opening in the middle of the panel to accommodate the clock dial, see Fig. 8. (I used a sabre saw for this.)

RABBET AND CHAMFERS. After the opening for the dial has been cut, rout a rabbet around the *back* edge of the opening, see Figs. 9 and 9a. This will hold the clock dial and also a dial panel (J) that's made later.

Next, I routed a decorative chamfer on the *front* edge of the opening, see Fig. 9b.

HINGE MORTISES. To complete the dial panel, cut a pair of shallow mortises on the *left* edge of the panel for the door hinges, see Fig. 10. Then attach the hinges to the door, but not yet to the case.

Finally, cut a ¼"-thick plywood **dial panel (J)** to fit the rabbet on the back of the door. Again, allow for a 1/16" gap all around the panel for shrinking/swelling of the door.

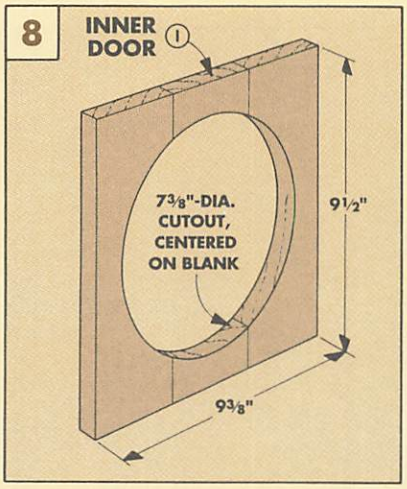

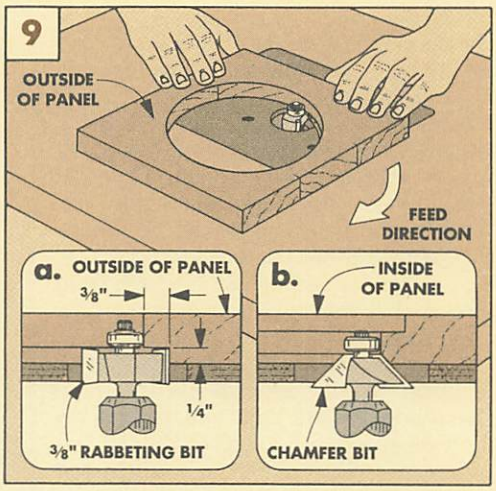

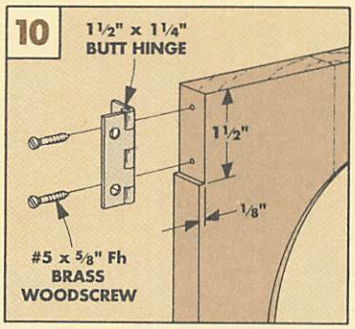

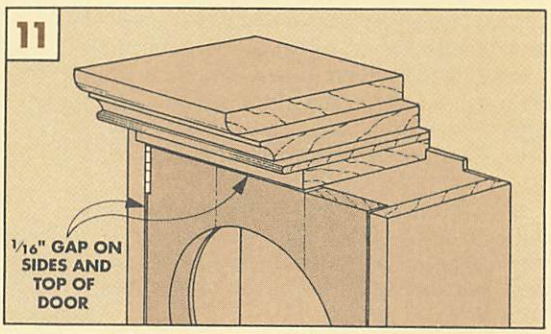

OUTER DOOR

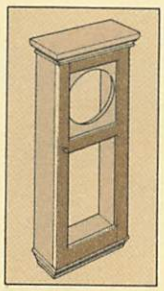

The outer door covers the front of the clock case, including the inner door. It's a mortise and tenon frame with two windows.

DOOR STILES. I started the outer door by ripping two vertical **stiles (K)** to width, see Fig. 12. Then I cut them to fit the opening of the case. Note: Allow 1/16" gap between the stiles and the transition moldings on the top and bottom.

DOOR RAILS. Next, rip three horizontal **rails (L** and **M)** to finished width, see Fig. 12. Design Note: All three rails are *not* the same width. If they were, the lower one would *appear* too narrow. So it's cut wider.

Now, cut the rails to fit between the stiles, see Fig. 12. Be sure to allow for the 1"-long tenons on the ends of the rails, see Fig. 12b.

MORTISE & TENON JOINTS. With the stiles and rails cut to size, mortises can be bored on the inside edges of the stiles, see Fig. 12a.

Then, cut the tenons on the ends of the rails to fit the mortises, see Fig. 12b. Now the door can be glued up and clamped.

WINDOW RABBETS. The glass windows rest in rabbets in the back side of this door, see Fig. 13. And they're held in place with strips of quarter-round molding and short nails, see Fig. 13a. (See the box below for cutting and installing the glass molding.)

After routing the rabbets, square up the corners with a chisel, see Fig. 13.

DOOR HINGES. Before installing the glass in the outer door, the hinges can be attached to the *right* edge of the door. Note: It swings in the opposite direction of the inner door.

To install the hinges, cut a mortise toward the top and bottom of the door, see Fig. 14. Don't hang the door till the case is complete.

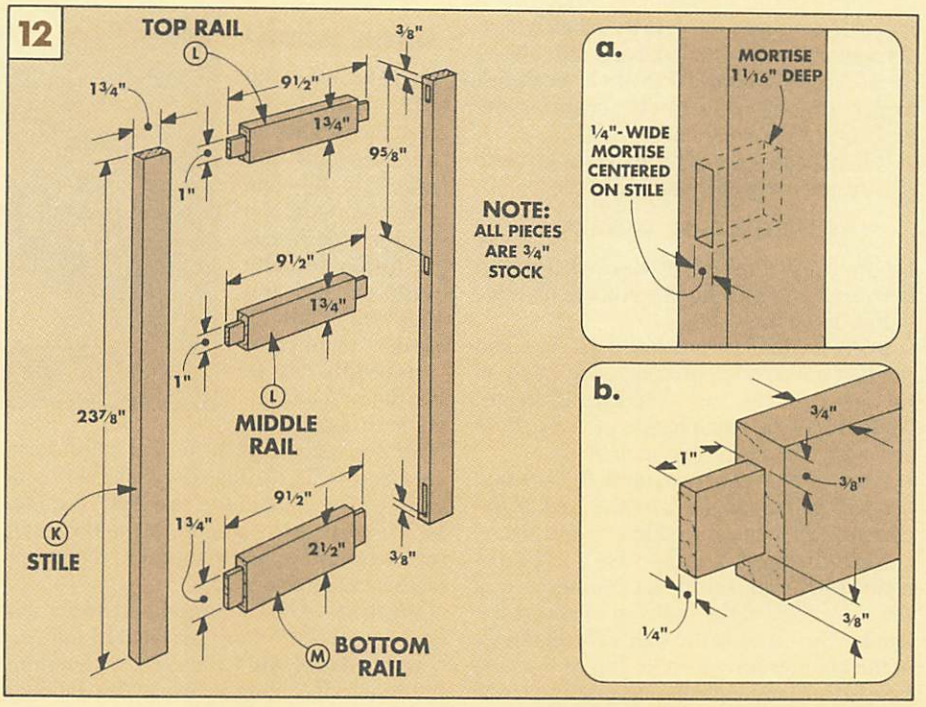

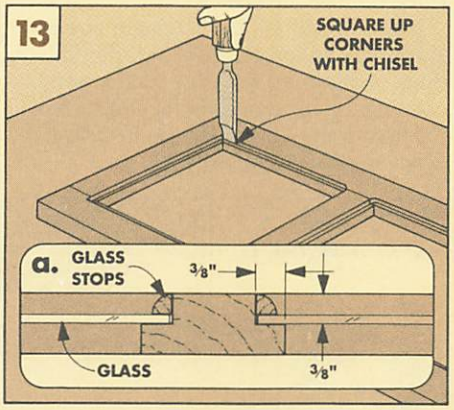

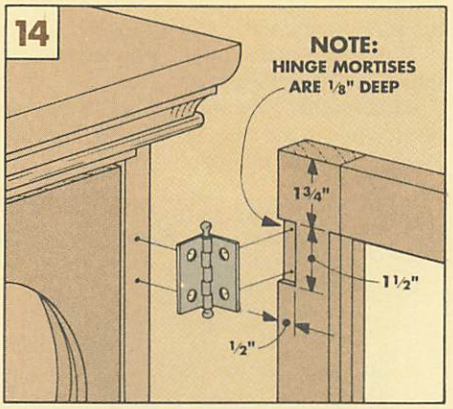

QUARTER-ROUND GLASS STOPS

One way to install glass windows in a wood frame is to use quarter-round molding. For this project I made my own.

I started with a 30"-long blank. Then ripped this to rough width, see drawing at right.

Now, the edges of the blank can be rounded over. Then the glass stops can be ripped from the blanks in three simple steps, see drawings. (An oversize blank makes the process safer.)

To install the glass, first miter the quarter-round strips to length. Then secure the glass by nailing the stops in place.

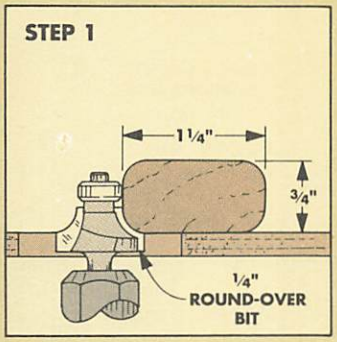

To make your own quarter-round molding for glass stops, start with an extra-long blank. Then round over the corners.

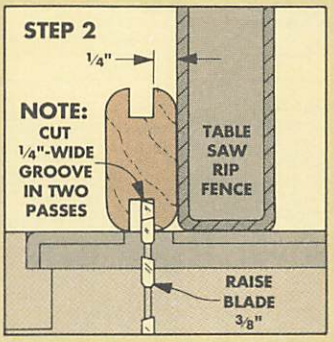

Next, position the rip fence the desired distance (1/4") from the blade. Now cut a groove on opposite edges of the blank.

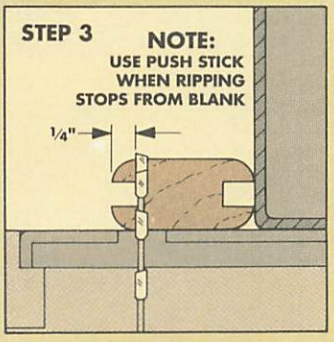

Finally, cut off two of the strips on the "waste" side of the blade. Then move the fence and cut off the other two strips.

FINISH & ASSEMBLY

It's easiest to apply finish to the clock before it's completely assembled. So, first I rubbed on a coat of General Finishes' Sealacell Sealer. Then I applied two top coats of General Finishes' Royal Finish (satin).

When the top coat of finish has dried completely, the hardware can be installed.

INNER DOOR & BACK

I started final assembly of the clock from the inside out. First, I hung the inner door, refer to Fig. 10 on page 28.

DOOR CATCH. Then I closed the door and marked the position of a magnetic catch on the inside of the case, see Fig. 15 below. Now, screw the catch inside the case, then screw the catch plate to the door.

HANGER PLATES. Next, mark the position of a pair of hanger plates on the back of the case toward the top, see Figs. 15 and 15a.

Note: In order for the case to fit flush against the wall, I drilled a counterbore in the back edge of the molding to accept the head of the screw in the wall. (The diameter of the counterbore must be *larger* than the hole in the hanger plate. This is so the notch in the hanger plate can slip onto the shank of the screw in the wall, see Fig. 15a.)

The hanger plates can now be screwed to the back of the clock case.

BACK PANEL. Now the plywood back can be attached to the case, see Fig. 15. For this I used ½" brads, but no glue.

OUTER DOOR

Next, I turned to the outer door. First, mark the position of the holes for the hinges on the edge of the case side, see Fig. 16. Then drill pilot holes for the hinge screws and temporarily attach the door to the case.

MAGNETIC CATCH. For the best appearance, I used a recessed magnetic catch for the outer door, see Fig. 16a. To do this, first drill a hole centered on the edge of the case side, see Fig. 16. Then press the magnet in the hole, and screw the strike plate to the door. (For more on this, refer to page 15.)

DOOR KNOB. Next, I installed a door knob on the front of the door, see Figs. 16 and 16a.

GLASS WINDOWS. I finished assembling the door by installing the two glass windows. (First remove the door.)

Note: I used ⅛"-thick (single strength) glass, and cut the glass ⅛" smaller in both dimensions than the size of the window openings. (This is to allow for contraction of the door frame.) For more on installing the glass, see the box on page 29.

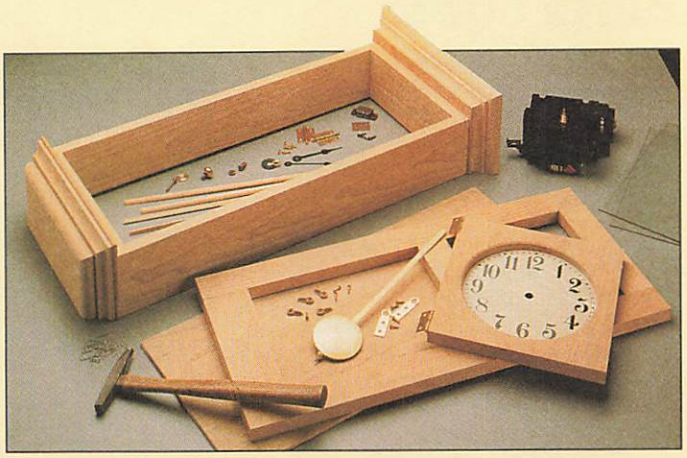

CLOCK DIAL & WORKS

Here's when the project becomes a clock.

DIAL & DIAL PANEL. Before installing the clock face (dial), a ½"- dia. hole must be drilled through the center of the dial panel (J) for the shaft on the clock, see Fig. 17.

Then, place the dial in the rabbet on the inside of the inner door. (Orient the markings on the dial so 12 o'clock is straight up.)

Secure the dial by installing the dial panel and four plastic retaining clips, see Fig. 17a.

CLOCK WORKS. Now the clock movement can be screwed to the back of the dial panel, see Fig. 17a. (Don't screw *through* the dial panel.) Finally, the hands are installed on the shaft, and pendulum hung below.

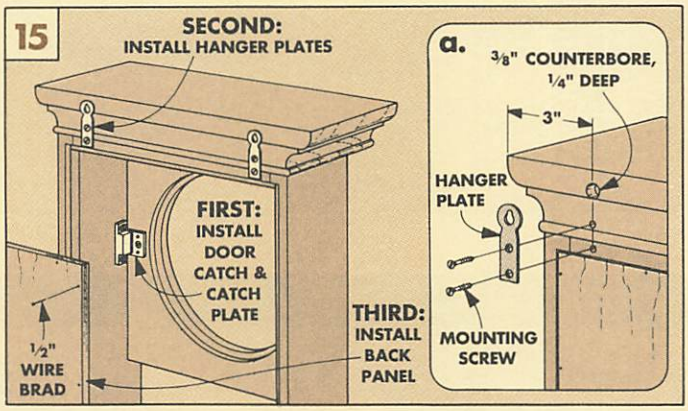

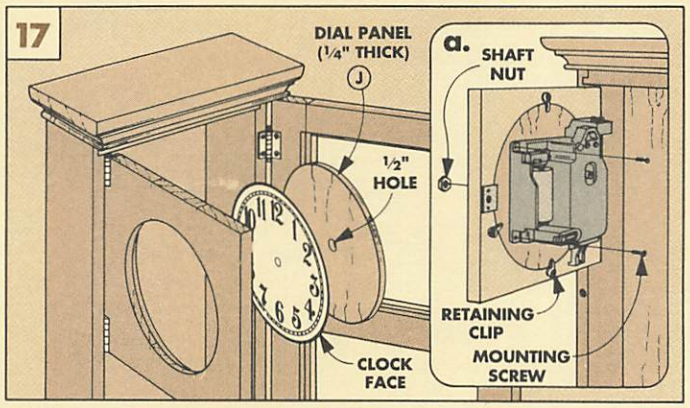

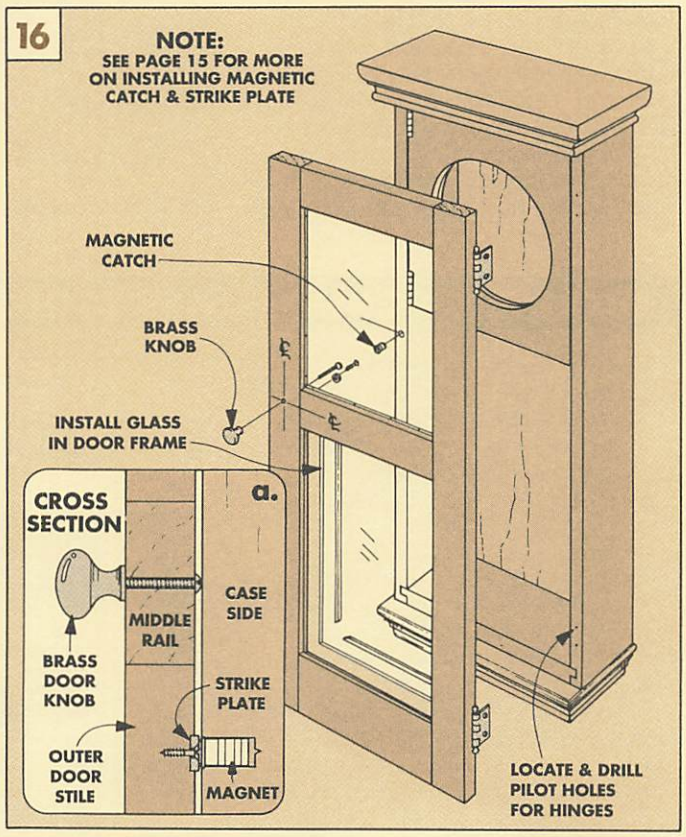

Sources

JEWELRY CHEST

A complete hardware kit for the Jewelry Chest (shown on page 8) is available from *Woodsmith Project Supplies.*

This kit does *not* include the walnut veneer for the panels (offered separately, see below). And it doesn't include the 10-ply posterboard or the 1/16"-thick mat board. (Both are available at your local art supply store.)

W89-789-100 Jewelry Chest Hardware Kit..... $19.95

VENEER. To make the lid and the panels on the Jewelry Chest, we used paper-backed veneer. (It doesn't crack as easily as other veneers.) If you're ordering the hardware kit and need walnut veneer as well, we offer it separately in a 24" x 24" sheet.

W89-302-2316 Walnut Paper-Backed Veneer..... $8.95

CHILD'S ROCKER

There isn't any special hardware needed for the Child's Rocker on page 16. Maple dowels are available from Woodworker's Supply, see below.

PENDULUM CLOCK

A hardware kit for building the Pendulum Clock on page 26 is available from *Woodsmith Project Supplies.* This kit does *not* include the glass or wood.

W89-789-200 Pendulum Clock Hardware Kit..... $89.95

TOOL ACCESSORIES

On page 23, we discussed some useful tool accessories. You can find most of these (or similar) items at a local woodworking store or in many mail order catalogs, see below.

ACCU-MITER. The basic Accu-Miter fence is 34" long and costs about $150. (But for $15 more, you can get a 46" fence.)

The Accu-Miter does *not* come with a runner for the miter gauge slot on your table saw. But one is available as an accessory. Or you can use the runner from your miter gauge. (You may need to drill new screw holes.)

Another handy accessory to the Accu-Miter is a manual hold-down clamp (about $35).

FEATHERBOARD. We have a Universal Featherboard in our shop. At about $20, it includes a large wing nut, hold-down "thumb," and miter gauge runner — all made of aluminum.

KEYLESS CHUCK. For around $38, you can buy a keyless chuck for the drill press. (A keyless chuck also requires a new drill chuck arbor — about $7).

SANDING DRUM SET. Sanding drums are available through most catalogs. We have a basic set in our shop that costs around $20. It has four drums, each 2" long. We also have a couple of longer drums for special tasks like thickness sanding.

CIRCLE-CUTTING JIG. The Circle-Cutting Jig is made by the Uniquest Corp. for about $40. It will cut circles up to 24" in diameter. (An extension bar for larger circles is also available.) Note: This jig is only for band saws with 1/2"-square blade guides.

TASK LAMP. Many manufacturers (such as Delta) offer task lamps for their stationary equipment. The one we use has a base with a magnet that attaches to any metal surface (around $20).

QUICK-CHANGE DRILL BITS. The Insty-Bit Chuck Adapter (about $12) and hex shank bits (sold individually or in sets from $13 to $50) are available from the Mail Order Sources below.

CLAMP 'N TOOL GUIDE. In our shop, we use a 50" Clamp 'N Tool Guide (about $35) for cross-cutting full sheets of plywood. Other sizes are also available.

DOVETAIL JIG. *Woodsmith Project Supplies* offers two Dovetail Jig kits. One includes the hardware only. The other is a Ready-To-Assemble (RTA) kit.

Also available separately is a template for 1/4" dovetails (with hardware). Neither kit includes the dovetail bits or the guide bushings, see below.

W89-758-310 1/2" Dovetail Jig Hardware Kit.....$38.95

W89-5002-200 1/2" Dovetail Jig RTA Kit.....$79.95

W89-758-341 1/4" Dovetail Template.....$28.95

GUIDE BUSHINGS. To find a guide bushing set that fits your router model, first check with the manufacturer of your router.

Woodsmith Project Supplies also offers a Universal Plate and Bushing Set. This plate fits most routers with round bases.

W89-5503-106 Universal Plate and Bushing Set..... $17.95

FINISHES

The Jewelry Chest shown on page 8 was finished with Sam Maloof's Oil/Wax finish. This finish is available from The Woodworkers' Store, see below.

For the other projects, we used General Finishes' oil/urethane finishes, available from *Woodsmith Project Supplies.*

W89-4003-601 Sealacell Sealer (Clear)..... $9.95 quart

W89-4003-602 Royal Finish Top Coat (Satin) ..... $9.95 quart

W89-4003-620 Arm-R-Seal Top Coat (Satin) ..... $9.95 quart

FLOCKING. The inside of the Dovetail Box was lined with decorative flocking (see page 15). We used an undercoat adhesive and Suede-Tex flocking fibers manufactured by DonJer Products, see sources below.

DonJer also offers a Spray Gun for applying Suede-Tex, but it's pretty expensive for home-shop use ($40-50). I found a cheaper "Floc-Gun" ($4) made out of cardboard at Meisel Hardware, see below.

ORDER INFORMATION

BY MAIL

To order by mail, use the order form that comes with the current issue. The order form includes information on handling and shipping charges, and sales tax.

If the mail order form is not available, please call our Toll Free number at the right for more information on specific charges and any applicable sales tax.

BY PHONE

For fastest service use our Toll Free order line. Open Monday through Friday, 7:00 A.M. to 7:00 P.M. Central Time.

Before calling, please have your VISA, MasterCard, or Discover Card ready.

1-800-444-7527

Note: Prices subject to change after December, 1993.

MAIL ORDER SOURCES

Similar hardware and supplies may be found in the following catalogs. Please call each company for a catalog or information.

Woodcraft
800–225–1153
Chest Hardware, Hex Shank Bits, Suede-Tex & Gun, Featherboard, Accu-Miter, Clamp 'N Tool Guide, Universal Bushing Set

Grizzly Imports
800–523–4777
Keyless Chuck, Insty-Bits

Japan Woodworker
800–537–7820
Sanding Drum Set, Clamp 'N Tool Guide

The Woodworkers' Store
612–428–3200
Clock & Chest Hardware, Featherboard, Insty-Bits , Suede-Tex & Gun, Sam Maloof & General Finishes

Woodworking Unlimited
800–543–7586
Accu-Miter, Clamp 'N Tool Guide, Insty-Bits

Trendlines
800–767–9999
Task Lamp, Universal Bushing Set, Featherboard

Woodworker's Supply
800–645–9292
Chest Hardware, Dowels, Suede-Tex & Gun, Featherboard, Hex Shank Bits, Circle-Cutting Jig

Meisel Hardware
800–441–9870
Flocking & Floc-Gun

Klockit
800–556–2548
Clock Movement

DonJer Products
800–336–6537
Suede-Tex & Gun

Final Details

Child's Rocker

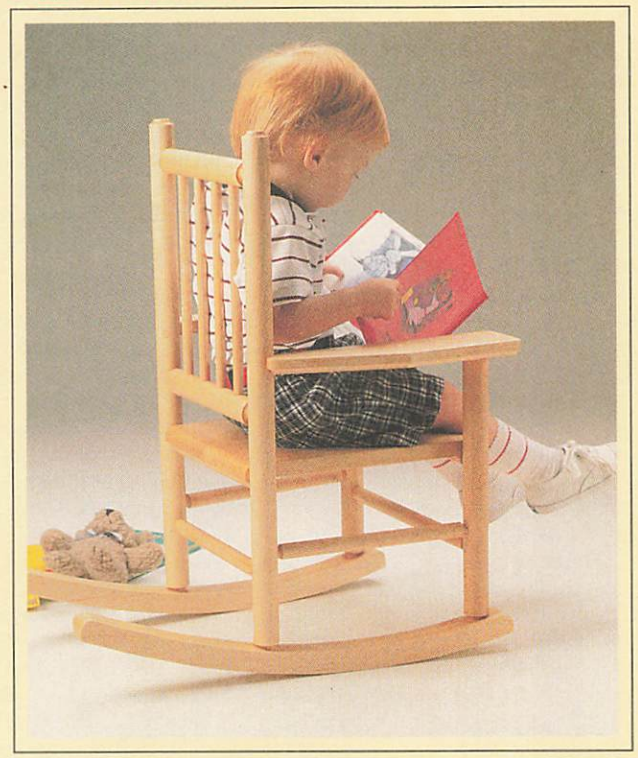

▲ *The frame of this rocker is built entirely from wood dowels. So you don't have to turn any spindles on the lathe. But best of all (for the child), dowels don't have sharp edges.*

Dovetail Box

▲ *The lid of this box slides in and out smoothly, thanks to an extra-wide dovetail groove. Inside the box are six small compartments lined with a suede-like flocking that's sprayed on.*

Jewelry Chest

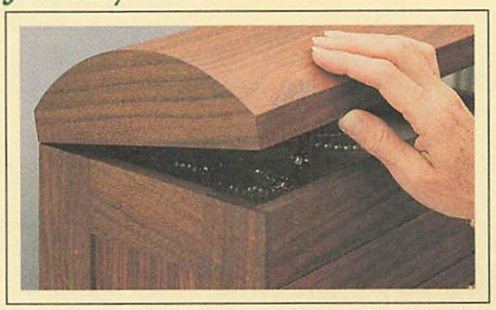

▲ *The curved top of this Jewelry Chest is plywood. But it's not store-bought — it's made in the shop. It adds extra room inside the chest.*

Pendulum Clock

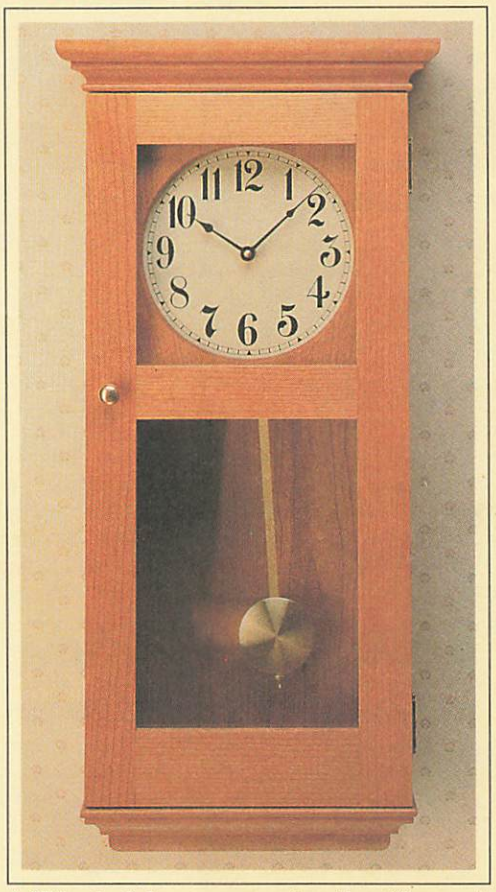

▲ *This clock has easy construction (the case), traditional joinery (a mortise and tenon door), and decorative trim (solid wood moldings).*